U.S. Department of Transportation

Federal Aviation Administration

Advisory Circular

TITLE 14 OF THE CODE OF FEDERAL REGULATIONS (14 CFR) GUIDANCE MATERIAL

Subject: ACCEPTABLE METHODS, TECHNIQUES, AND PRACTICES—AIRCRAFT INSPECTION AND REPAIR	**Date:** 9/27/01 **Initiated by:** AFS-640	**AC No:** 43.13-1B **Change:** 1

1. **PURPOSE.** This change transmits revised pages for the subject advisory circular (AC).

2. **PRINCIPAL CHANGE.** This change is initiated to incorporate error corrections that occurred during publication as well as additional new maintenance information. The vertical bar (|) in the outside margins indicates the changes. The change number and date of the changed material are carried at the top of each changed page. Rearranged pages having no new material also carry the new change number and date. Pages having no change retain the same heading information. Chapter 12, Section 4, Pitot Static, and Chapter 13, Human Factors, are added.

3. **DISPOSITION OF TRANSMITTAL.** After filing the revised pages, retain this change transmittal.

PAGE CONTROL CHART

Remove Pages	Dated	Insert Pages	Dated
ix - xii	9/8/98	ix - x	9/27/01
		xi	9/8/98
		xii	9/27/01
xxiii – xxxii	9/8/98	xxiii-xxviii-b	9/27/01
		xxix	9/8/98
		xxx - xxxiv	9/27/01
1-3 – 1-4	9/8/98	1-3 – 1-4	9/27/01
1-33 – 1-34	9/8/98	1-33 – 1-34	9/27/01
2-21 – 2-24	9/8/98	2-21	9/27/01
		2-22	9/8/98
		2-23 – 2-24	9/27/01
2-27 – 2-28	9/8/98	2-27 – 2-28	9/27/01
2-33 – 2-34	9/8/98	2-33	9/27/01
		2-34	9/8/98
4-1 – 4-4	9/8/98	4-1 – 4-4	9/27/01
4-11 – 4-12	9/8/98	4-11	9/27/01
		4-12	9/8/98
4-19 – 4-22	9/8/98	4-19 – 4-19b	9/27/01
		4-20	9/8/98
		4-21	9/27/01
		4-22	9/8/98
4-27 – 4-28	9/8/98	4-27	9/27/01
		4-28	9/8/98
4-53 – 4-80	9/8/98	4-53 – 4-82	9/27/01
5-21 – 5-24	9/8/98	5-21	9/8/98
		5-22 – 5-24	9/27/01

Remove Pages	Dated	Insert Pages	Dated
5-33 – 5-34	9/8/98	5-33	9/27/01
		5-34	9/8/98
5-43 – 5-44	9/8/98	5-43	9/27/01
		5-44	9/8/98
6-1 – 6-8	9/8/98	6-1 – 6-7	9/27/01
		6-8	9/8/98
7-1 – 7-2	9/8/98	7-1	9/8/98
		7-2	9/27/01
7-35 – 7-40	9/8/98	7-35	9/8/98
		7-36 – 7-37	9/27/01
		7-38	9/8/98
		7-39 – 7-40	9/27/01
8-7 – 8-8	9/8/98	8-7	9/27/01
		8-8	9/8/98
8-11 – 8-16	9/8/98	8-11	9/8/98
		8-12 – 8-15	9/27/01
		8-16	9/8/98
8-29 – 8-30	9/8/98	8-29 – 8-30	9/27/01
9-1 – 9-14	9/8/98	9-1 – 9-12b	9/27/01
		9-13	9/8/98
		9-14	9/27/01
9-17 – 9-20	9/8/98	9-17	9/8/98
		9-18 – 9-20b	9/27/01
9-25 – 9-28	9/8/98	9-25 – 9-26	9/27/01
		9-27	9/8/98
		9-28	9/27/01
9-37 – 9-42	9/8/98	9-37 – 9-39	9/27/01
		9-40	9/8/98
		9-41 – 9-42	9/27/01
10-1 - 10-4	9/8/98	10-1 – 10-4	9/27/01
10-7 – 10-8	9/8/98	10-7 – 10-8	9/27/01
10-11 – 10-12	9/8/98	10-11 – 10-12b	9/27/01
11-11 – 11-16	9/8/98	11-11 – 11-14	9/27/01
		11-15	9/8/98
		11-16	9/27/01
11-21 – 11-42	9/8/98	11-21 – 11-34b	9/27/01
		11-35	9/8/98
		11-36 – 11-42	9/27/01
11-43 – 11-52	9/8/98	11-43	9/8/98
		11-44 – 11-52b	9/27/01
11-57 – 11-58	9/8/98	11-57 – 11-58	9/27/01
11-67 – 11-72	9/8/98	11-67 – 11-72	9/27/01
11-83 – 11-92	9/8/98	11-83 – 11-92	9/27/01
11-95 – 11-96	9/8/98	11-95	9/8/98
		11-96	9/27/01
11-103 – 11-104	9/8/98	11-103	9/27/01
		11-104	9/8/98

Remove Pages	**Dated**	**Insert Pages**	**Dated**
11-109 – 11-110	9/8/98	11-109 – 11-110	9/27/01
12-3 – 12-20	9/8/98	12-3 – 12-26	9/27/01
		13-1 – 13-2	9/27/01
Appendix 1 (pages 1 - 10)	9/8/98	1	9/8/98
		2 – 10	9/27/01
Appendix 2 (pages 1 - 2)	9/8/98	1	9/27/01
		2	9/8/98

Nicholas A. Sabatini
Director, Flight Standards Service

CONTENTS (CONTINUED)

Paragraph Page

4-59. Repairing Cracked Members 4-40
Figure 4-20. Example of Intermediate Frame Stringer Splice (Material 2017-T3 AL Alloy)....4-41
Figure 4-21. Typical Methods of Repairing Cracked Leading and Trailing Edges and Rib Intersections 4-42
Figure 4-22. Typical Methods of Replacing Cracked Member at Fittings....4-43
Figure 4-23. Typical Methods of Repairing Cracked Frame and Stiffener Combination....4-44
Figure 4-24. Typical Repairs to Rudder and to Fuselage at Tail Post 4-45
4-60. Steel and Aluminum Fittings....4-40
Figure 4-25. Typical Methods of Repairing Elongated or Worn Bolt Holes 4-46
4-61. Castings....4-40
4-62. Selective Plating in Aircraft Maintenance 4-40
4-63.—4-73. [RESERVED.] 4-51

SECTION 5. WELDING AND BRAZING

4-74. General....4-53
Table 4-12. Current and Polarity Selection for Inert Gas Welding 4-54
Figure 4-26. Common Defects to Avoid when Fitting and Welding Aircraft Certification Cluster....4-55
Table 4-13. Torch Tip Sizes 4-55
Figure 4-27 Butt-Welding Strength Calculations....4-56
4-75. Equipment Selection....4-53
4-76. Accurately Identify the Type of Material to be Repaired....4-54
4-77. Preparation for Welding 4-54
4-78. Inspection of a Completed Weld....4-54
4-79. Microfissures 4-55
4-80. Nondestructive Testing....4-55
4-81. Practices to Guard Against 4-55
4-82. Torch Size (Oxyacetylene welding)....4-55
4-83. Welding Rods and Electrodes 4-56
4-84. Rosette Welds 4-56
4-85. Heat-Treated Members....4-56
4-86. Types of Welding 4-56
Figure 4-28. Basic Gas-Welding Flames: Each has Distinctive Shape, Color and Sound. Neutral Flame is the Most Used 4-57
Figure 4-29. Set TIG Welder to DC Current, Straight Polarity for Welding Mild Steel, Stainless Steel and Titanium....4-58
Figure 4-30. Set TIG to AC Current for Welding Aluminum and Magnesium 4-58
4-87. Electric-Resistance Welding 4-58
Figure 4-31. In Spot Welding, Heat is Produced by Electrical Resistance Between Copper Electrodes. Pressure is Simultaneously Applied to Electrode Tips to Force Metal Together to Complete Fusing Process. Spot-Weld-Nugget Size is Directly Related to Tip Size 4-58
4-88. Brazing....4-59
Table 4-14. Calculated Allowable Strength of Base Metal 4-60
Figure 4-32. Silver Brazing Joints 4-60
Figure 4-33. Electric Soldering Iron....4-61
4-89. Aircraft Parts Not to be Welded....4-62
4-90. Welding Rod Selection....4-62
Table 4-15. Chart Showing Welding Filler Rod Selection 4-63
4-91. Repair of Tubular Members....4-62
Figure 4-34. Finger Patch Repairs for Members Dented at a Cluster....4-64

CONTENTS (CONTINUED)

Paragraph Page

4-92. Repair by Welded Sleeve 4-65
Figure 4-35. Members Dented in a Bay (Repairs by Welded Sleeve)....4-66
4-93. Repair by Bolted Sleeve 4-65
4-94. Welded-Patch Repair....4-65
Figure 4-36. Welded Patch Repair 4-67
4-95. Splicing Tubing by Inner-Sleeve Method....4-65
Figure 4-37. Splicing by Inner-Sleeve Method....4-67
4-96. Splicing Tubing by Outer-Sleeve Method....4-65
Figure 4-38. Splicing by Outer-Sleeve Method (Replacement by Welded Outside Sleeve) 4-69
Figure 4-39. Tube Replacement at a Station by Welded Outer Sleeves....4-69

CONTENTS (CONTINUED)

Paragraph Page

4-97. Splicing Using Larger Diameter Replacement Tubes 4-68
Figure 4-40. Splicing Using Larger Diameter Replacement Tube 4-70
4-98. Repairs at Built-In Fuselage Fittings 4-71
Figure 4-41. Repairs at Built-In Fuselage Fittings 4-72
4-99. Engine-Mount Repairs 4-71
4-100. Built-Up Tubular Wing or Tail-Spars 4-73
Figure 4-42. Streamline Tube Splice Using Round Tube (Applicable to Landing Gear) 4-74
4-101. Wing-Brace Struts and Tail-Brace Struts 4-73
Figure 4-43. Streamline Tube Splice Using Split Sleeve (Applicable to Wing and Tail Surface Brace Struts and Other Members) 4-75
4-102. Landing Gear Repair 4-73
Figure 4-44. Streamline Tube Splice Using Split Insert (Applicable to Landing Gear) 4-76
Figure 4-45. Streamline Tube Splice Using Plates (Applicable to Landing Gear) 4-77
Figure 4-46. Representative Types of Repairable Axle Assemblies 4-78
Figure 4-47. Landing Gear Assemblies that Cannot be Repaired by Welding 4-79
4-103. Repairs to Welded Assemblies 4-74
4-104. Stainless Steel Structure 4-75
4-105.—4-110. [RESERVED.] 4-79

SECTION 6. WELDING AND BRAZING SAFETY

4-111. General 4-81
4-112. Fire and Explosion Safety 4-81
4-113. Welding Work Area 4-81
4-114. Fire Protection 4-81
4-115. Protective Apparel 4-82
4-116. First-Aid Kits 4-82
4-117.—4-128. [RESERVED.] 4-82

CHAPTER 5. NONDESTRUCTIVE INSPECTION (NDI)

SECTION 1. GENERAL

5-1. General 5-1
5-2. Approved Procedures 5-1
5-3. NDT Levels 5-1
5-4. Training, Qualification, and Certification 5-2
5-5. Flaws 5-2
5-6. Selecting the NDI Method 5-5
Table 5-1. Advantages and Disadvantages of NDI Methods 5-7
5-7. Types of Inspections 5-6
5-8.—5-14. [RESERVED.] 5-7

SECTION 2. VISUAL INSPECTION

5-15. General 5-9
5-16. Simple Visual Inspection Aids 5-9
5-17. Borescopes 5-10
Figure 5-1. Typical Borescope Designs 5-11

CONTENTS (CONTINUED)

Paragraph Page

5-18. Visual Inspection Procedures 5-10
Figure 5-2. Using a flashlight to Inspect for Cracks 5-13
5-19.—5-24. [RESERVED.] 5-13

SECTION 3. EDDY CURRENT INSPECTION

5-25. Eddy Current Inspection 5-15
Figure 5-3. Generating an Eddy Current 5-15
Figure 5-4. Detecting an Eddy Current 5-15
Figure 5-5. Typical Instrument Displays 5-16
5-26. Eddy Current Coils and Probes 5-15
5-27. Field Application of Eddy Current Inspection 5-15
5-28. Surface Inspection 5-16
Figure 5-6. Typical Surface Cracks 5-16
5-29. Subsurface Inspection 5-17
Figure 5-7. Typical Subsurface Cracks 5-18
5-30. Corrosion Inspection 5-17
Figure 5-8. Typical Structural Corrosion 5-18
5-31. Establishing Eddy Current Inspection Procedures 5-17
5-32.—5-39. [RESERVED.] 5-18

SECTION 4. MAGNETIC PARTICLE INSPECTION

5-40. General 5-19
5-41. Principles of Operation 5-19
Figure 5-9. Magnetic field Disrupted 5-19
Figure 5-10. Crack Detection by Magnetic Particle Inspection 5-19
5-42. Applications 5-20
5-43. Electrical Magnetizing Equipment 5-20
5-44. Materials Used in Magnetic Particle Inspection 5-20
Table 5-2. Listing of Commonly Accepted Standards and Specifications for Magnetic Particle Inspection 5-21
5-45. Preparation of Surface 5-22
5-46. Methods of Examination 5-22
5-47. Application of Magnetic Particles 5-22
5-48. Magnetization 5-23
Figure 5-11. Circular Magnetization 5-23
Figure 5-12. Longitudinal Magnetization 5-24
5-49. Determination of Field Strength 5-25
5-50. Special Examination Techniques 5-25
5-51. Demagnetization and Post-Examination Cleaning 5-27
5-52.—5-59. [RESERVED.] 5-28

SECTION 5. PENETRANT INSPECTION

5-60. General 5-29
Figure 5-13. Penetrant and Developer Action 5-30
5-61. Equipment Used in the Penetrant Inspection Process 5-29
Table 5-3. Classification of Penetrant Inspection Materials Covered by MIL-I-25135E 5-30

CONTENTS (CONTINUED)

Paragraph Page

5-62. Basic Steps to Perform Penetration Inspection 5-29
Table 5-4. Fluorescent and Visible Penetrant Inspection General Processing Procedures Flowsheet 5-31
Table 5-5. Pre-Cleaning Methods for Penetrant Inspection 5-32
5-63. Cleaners and Applicators 5-33
5-64. Technical Standards 5-34
Table 5-6. Listing of Commonly Accepted Standards and Specifications for Penetrant Inspection 5-35
5-65.—5-72. [RESERVED.] 5-35

SECTION 6. RADIOGRAPHY (X-RAY) INSPECTION

5-73. General 5-37
Figure 5-14. Radiography 5-38
5-74. Limitations 5-37
5-75. Film or Paper Radiography 5-37
5-76. Real-Time Radiography 5-37
5-77. Advantage of Real-Time Radiography Over Film Radiography 5-37
5-78. Computed Tomography (CT) 5-37
5-79. Uses of Radiography 5-38
5-80. Comparison with Other NDI Methods 5-38
5-81. Flaws 5-39
5-82. Field Inspection 5-39
5-83. Safety 5-39
5-84.—5-88. [RESERVED.] 5-39

SECTION 7. ULTRASONIC INSPECTION

5-89. General 5-41
Figure 5-15. Ultrasound 5-42
5-90. Sound Reflection 5-41
5-91. Ultrasonic Inspection Techniques 5-41
Figure 5-16. Pulse-Echo and through-Transmission Ultrasonic Inspection Techniques 5-42
5-92. Flaw Detection 5-41
5-93. Basic Equipment 5-41
Figure 5-17. Typical Portable Ultrasonic Inspection Instrument 5-43
Figure 5-18. Example of Position fixture and Shoe 5-44
Figure 5-19. Example of the Use if a Transducer Positioning Fixture 5-44
Figure 5-20. Example of a Typical Reference Standard 5-44
5-94. Inspection of Bonded Structures 5-43
Figure 5-21. Examples of Bonded Structure Configurations and Suggested Inspection Coverage 5-47
Table 5-7. Acceptable Ultrasonic Inspection Methods Associated with the Example Bonded Structure Configurations Shown in Figure 5-21. 5-48
Table 5-8. Ultrasonic Inspection Methods for Bonded Structures 5-49
5-95. Bond Testing Instruments 5-46
5-96. Thickness Measurements 5-50
5-97. Leak Testing 5-50
5-98.—5-104. [RESERVED.] 5-51

CONTENTS (CONTINUED)

Paragraph Page

CHAPTER 9. AIRCRAFT SYSTEMS AND COMPONENTS

SECTION 1. INSPECTION AND MAINTENANCE OF LANDING GEAR

9-1. General 9-1
9-2. General Inspection 9-1
9-3. Cleaning and Lubricating 9-1
9-4. Fixed-Gear Inspection 9-1
Table 9-1. Bungee Cord Color Codes 9-2
9-5. Inspection of Retractable Landing Gear 9-3
9-6. Emergency Systems 9-3
9-7. Landing Gear Components 9-4
9-8. Floats and Skis 9-5
Figure 9-1. A Typical Ski Installation 9-6
9-9. Inspection and Repair of Floats and Skis 9-7
9-10. Types of Landing Gear Problems 9-8
Figure 9-2. Typical Bolt Cracks 9-8
Figure 9-3. Typical Cracks Near Bolt Holes 9-8
Figure 9-4. Typical Bolt Hole Cracks 9-9
Figure 9-5. Typical Rod-End Cracks 9-9
Figure 9-6. Typical Torque Tube Bolt Hole Elongation 9-9
9-11. Special Inspections 9-9
9-12. Retraction Tests 9-9
9-13. Tire and Tube Maintenance 9-9
9-14. Tire Inspection and Repair 9-10
Figure 9-7. Examples of Tread Wear Indicating Over-Inflation and Under-Inflation 9-11
9-15. Inflation of Tires 9-11
9-16. Personal Safety 9-11
9-17. Disassemble the Wheel 9-11
9-18. Reassembling the Wheel 9-12
9-19. Slippage 9-12
9-20. Wheel Inspection 9-12
9-21. Wheel Installation 9-12a
9-22.—9-24. [RESERVED.] 9-12

SECTION 2. HYDRAULIC SYSTEMS

9-25. General 9-13
9-26. Purposes of Hydraulic Systems 9-13
9-27. Types of Hydraulic Fluid 9-13
9-28. Handling Hydraulic Fluids 9-14
9-29. Hydraulic System Maintenance Practices 9-15
9-30. Hydraulic Lines and Fittings 9-18
Table 9-2. Tube Data 9-19
Figure 9-8. Hose Assembly Instructions (Can Be Used for Low Pressure Hydraulic Fluid, and Oil Line Applications) 9-21

CONTENTS (CONTINUED)

Paragraph Page

Table 9-3. Aircraft Hose Specifications 9-22
Figure 9-9. Proper Hose Installations 9-23
Figure 9-10. Minimum Bend Radii 9-24
Table 9-4. Ball Diameters for Testing Hose Restrictions or Kinking 9-25
Figure 9-11. Suggested Handling of Preformed Hose 9-25
9-31.—9-36. [RESERVED.] 9-26

SECTION 3. EMERGENCY EQUIPMENT

9-37. Life Rafts 9-27
9-38. Life Raft Inspections 9-27
Figure 9-12. Inflation Valve 9-29
9-39. Survival Kit Inspection 9-28
9-40. Special Inspections 9-31
9-41. Inspection Record 9-32
9-42. Raft Repairs 9-32
Figure 9-13. Repair Dimensions 9-33
9-43. Life Preservers 9-34
9-44. Life Preserver Inspection 9-35
9-45. Repair of Life Preservers 9-36
9-46. Miscellaneous Equipment 9-36
9-47. Oxygen Systems 9-37
9-48. Inspection 9-37
9-49. Maintenance 9-38
Figure 9-14. Oxygen Cylinder Damage 9-39
Figure 9-15. Cylinder Brackets and Clamps 9-39
9-50. Functional Testing After Repair 9-41
9-51. Service Requirements --Oxygen Cylinders 9-41
Table 9-5. Table of Filling Pressures 9-43
9-52.—9-59. [RESERVED.] 9-43

SECTION 4. CABIN INTERIOR

9-60. General 9-45
9-61. Car-3 Aircraft Interior 9-45
9-62. Part 23 Aircraft Interior 9-45
9-63. Source of Information 9-46
9-64. Upholstery and/or Belts 9-46
9-65.—9-70. [RESERVED.] 9-46

CHAPTER 10. WEIGHT AND BALANCE

SECTION 1. TERMINOLOGY

10-1. General 10-1
10-2. Terminology 10-1
Figure 10-1. Typical Datum Locations 10-2
Figure 10-2. Illustration of Arm (or Moment Arm) 10-3
Figure 10-3. Example of Moment Computation 10-4
Figure 10-4. Empty Weight Center of Gravity Formulas 10-5
Figure 10-5. Empty Weight and Empty Center of Gravity - Tail-Wheel Type Aircraft 10-6

CONTENTS (CONTINUED)

Paragraph Page

Figure 10-6. Empty Weight and Empty Weight Center of Gravity - Nosewheel Type Aircraft 10-7
Figure 10-7. Operating Center of Gravity Range 10-8
Figure 10-8. Weighing Point Centerline 10-9
10-3.—10-13. [RESERVED.] 10-9

SECTION 2. WEIGHING PROCEDURES

10-14. General 10-11
10-15. Procedures 10-11
Figure 10-9. Empty Weight and Empty Weight Center of Gravity When Aircraft is Weighed With Oil 10-12a
10-15a. Repairs and Alterations 10-11
10-15b. Annual or 100-Hour Inspection 10-11
10-16. Weight and Balance Computations 10-11
10-17. Weight and Balance Extreme Conditions 10-13
Figure 10-10. Example of Check of Most Forward Weight and Balance Extreme 10-14
Figure 10-11. Example of Check of Most Rearward Weight and Balance Extreme 10-16
10-18. Loading Conditions and/or Placards 10-15
Figure 10-12. Loading Conditions: Determination of the Number of Passengers and Baggage Permissible with Full Fuel 10-17
Figure 10-13. Loading Conditions: Determination of the Fuel and Baggage Permissible with Maximum Passengers 10-18
Figure 10-14. Loading Conditions: Determination of the Fuel and the Number and Location of Passengers Permissible with Maximum Baggage 10-19
10-19. Equipment List 10-15
10-20. Equipment Change 10-15
Figure 10-15. Effects of the Addition of Equipment Items on Balance 10-20
Figure 10-16. Example of Moment and Weight Changes Resulting From Equipment Changes 10-21
10-21. Sample Weight and Balance Report 10-20
Figure 10-17. Sample Weight and Balance Report to Determine Empty Weight Center of Gravity 10-22
Figure 10-18. Sample Weight and Balance Report Including an Equipment Change for Aircraft Fully Loaded 10-23
10-22. Installation of Ballast 10-20
Figure 10-19. Permanent Ballast Computation Formula 10-24
10-23. Loading Schedule 10-24
10-24.—10-34. [RESERVED.] 10-24

CHAPTER 11. AIRCRAFT ELECTRICAL SYSTEMS

SECTION 1. INSPECTION AND CARE OF ELECTRICAL SYSTEMS

11-1. General 11-1
11-2. Inspection and Operation Checks 11-1
11-3. Functional Check of Check of Stand-By or Emergency Equipment 11-2
11-4. Cleaning and Preservation 11-2
11-5. Battery Electrolyte Corrosion 11-2
11-6. Adjustment and Repair 11-2
11-7. Insulation of Electrical Equipment 11-2
11-8. Bus Bars 11-3
11-9.—11-14. [RESERVED.] 11-3

CONTENTS (CONTINUED)

Paragraph Page

SECTION 2. STORAGE BATTERIES

11-15. General 11-5
11-16. Battery Charging 11-5
11-17. Battery Freezing 11-5
Table 11-1. Lead-Acid Battery Electrolyte Freezing Points 11-5
11-18. Temperature Correction 11-5
Table 11-2. Sulfuric Acid Temperature Correction 11-6
11-19. Battery Maintenance 11-6
11-20. Electrolyte Spillage 11-8
11-21. Noxious Fumes 11-9
11-22. Installation Practices 11-9
Figure 11-1. Battery Ventilating Systems 11-9
11-23.—11-29. [RESERVED.] 11-10

SECTION 3. INSPECTION OF EQUIPMENT INSTALLATION

11-30. General 11-11
11-31. Installation Clearance Provisions 11-11
11-32. Wires, Wire Bundles, and Circuit Protective Devices 11-11
11-33. Alternator Diodes 11-11
11-34. Static Electrical Power Converters 11-11
11-35. Acceptable Means of Controlling or Monitoring the Electrical Load 11-12
11-36. Electrical Load Determination 11-12
11-37. Junction Box Construction 11-13
11-38.—11-46. [RESERVED.] 11-13

SECTION 4. INSPECTION OF CIRCUIT-PROTECTION DEVICES

11-47. General 11-15
11-48. Determination of Circuit Breaker Ratings 11-15
11-49. DC Circuit Protector Chart 11-15
Table 11-3. DC Wire and Circuit Protector Chart 11-15
11-50. Resettable Circuit Protection Devices 11-15
11-51. Circuit Breaker Usage 11-15
11-52. Circuit Breaker Maintenance 11-16
11-53. Switches 11-16
Table 11-4. Switch Derating Factors 11-17
Table 11-5. Selection of Contact Material 11-17
11-54. Relays 11-19
11-55. Load Considerations 11-20
11-56. Operating Conditions for Switches and Relays 11-20
11-57.—11-65. [RESERVED.] 11-20

SECTION 5. ELECTRICAL WIRE RATING

11-66. General 11-21
Table 11-6. Tabulation Chart (Allowable Voltage Drop) 11-21
Table 11-7. Examples of Determining Required Wire Size Using Figure 11-2 11-22
Table 11-8. Examples of Determining Maximum Run Length Using Figure 11-3 11-22

CONTENTS (CONTINUED)

Paragraph Page

Table 11-9. Current Carrying Capacity and Resistance of Copper Wire 11-23
Table 11-10. Current Carrying Capacity and Resistance of Aluminum Wire 11-24
11-67. Methods for Determining Current Carrying Capacity of Wires 11-25
11-68. Instructions for Use of Electrical Wire Chart 11-25
11-69. Computing Current Carrying Capacity 11-28
Figure 11-2. Conductor Chart, Continuous Flow 11-30
Figure 11-3. Conductor Chart, Intermittent Flow 11-31
Figure 11-4a. Single Copper Wire in Free Air 11-32
Figure 11-4b. Single Copper Wire in Free Air 11-33
Figure 11-5. Bundle Derating Curves 11-34
Figure 11-6. Altitude Derating Curve 11-34a
11-70.—11-75. [RESERVED.] 11-34a

SECTION 6. AIRCRAFT ELECTRICAL WIRE SELECTION

11-76. General 11-35
11-77. Aircraft Wire Materials 11-35
11-78. Substitutions 11-36
11-79.—11-84. [RESERVED.] 11-37

SECTION 7. TABLE OF ACCEPTABLE WIRES

11-85. Aircraft Wire Table 11-39
Table 11-11. Open Wiring 11-40
Table 11-12. Protected Wiring 11-41
11-86. Open Airframe Interconnecting Wire 11-39
11-87. Protected Wire 11-39
11-88. Severe Wind and Moisture Problems (SWAMP) 11-39
11-89. Shielded Wire 11-39
11-90.—11-95. [RESERVED.] 11-41

SECTION 8. WIRING INSTALLATION INSPECTION REQUIREMENTS

11-96. General 11-43
11-97. Wiring Replacement 11-45
11-98. Terminals and Terminal Blocks 11-46
11-99. Fuses and Fuse Holders 11-47
11-100. Connectors 11-47
11-101. Junction Boxes, Panels, Shields, and Microswitch Housings 11-48
11-102. Conduit-Rigid Metallic, Flexible Metallic and Rigid Nonmetallic 11-48
11-103. Junctions 11-48
11-104. Circuit Breakers 11-49
11-105. System Separation 11-49
11-106. Electromagnetic Interference (EMI) 11-49
11-107. Interference Tests 11-49
11-108. Identification Stencils and Placards On Electrical Equipment 11-50
11-109.—11-114. [RESERVED.] 11-50

CONTENTS (CONTINUED)

Paragraph Page

SECTION 9. ENVIRONMENTAL PROTECTION AND INSPECTION

11-115. Maintenance and Operations 11-51
11-116. Group and Bundle Ties 11-51
Figure 11-7. Group and Bundle Ties 11-51
Figure 11-8. Comb for Straightening Wires in Bundles 11-51
11-117. Minimum Wire Bend Radii 11-51
11-118. Slack 11-52
Figure 11-9a. Slack Between Supports 11-52a
11-118a. Drip Loop in Wire Bundle 11-52
Figure 11-9b. Drainage Hole in Low Point of Tubing 11-52a
11-119. Power Feeders 11-52
11-120. RF Cable 11-52
11-121. Precautions 11-52
11-122. Moisture Protection, Wheel Wells, and Landing Gear Areas 11-53
11-123. Protection Against Personnel and Cargo 11-53
11-124. Heat Precautions 11-53
11-125. Movable Controls Wiring Precautions 11-53
11-126. Flammable Fluids and Gases 11-53
Figure 11-10. Separation of Wires From Plumbing Lines 11-54
11-127.—11-134. [RESERVED.] 11-55

SECTION 10. SERVICE LOOP HARNESSES (PLASTIC TIE STRIPS)

11-135. General 11-55
11-136. Support 11-55
11-137. Anti-Chafing Material 11-55
11-138. Strain Relief 11-55
11-139. Service Loop 11-55
11-140.—11-145. [RESERVED.] 11-56

SECTION 11. CLAMPING

11-146. General 11-57
Figure 11-11. Safe Angle for Cable Clamps 11-58
Figure 11-12. Typical Mounting Hardware for MS-21919 Cable Clamps 11-58
Figure 11-13. Installing Cable Clamp to Structure 11-59
Figure 11-14. Clamping at a Bulkhead Hole 11-60
11-147. Wire and Cable Clamps Inspection 11-57
11-148.—11-154. [RESERVED.] 11-60

SECTION 12. WIRE INSULATION AND LACING STRING TIE

11-155. General 11-61
11-156. Insulation Materials 11-61
11-157. Stripping Insulation 11-61
Table 11-13. Allowable Nicked or Broken Strands 11-62
11-158. Lacing and Ties 11-61
Figure 11-15. Single Cord Lacing 11-63
Figure 11-16. Double Cord Lacing 11-63
Figure 11-17. Making Ties 11-64

CONTENTS (CONTINUED)

Paragraph Page

11-159. Insulation Tape 11-62
11-160.—11-166. [RESERVED.] 11-64

CONTENTS (CONTINUED)

Paragraph Page

SECTION 13. SPLICING.

11-167 General 11-65
Figure 11-18. Staggered Splices in Wire Bundle 11-65
11-168.—11-173. [RESERVED.] 11-65

SECTION 14. TERMINAL REPAIRS

11-174. General 11-67
11-175. Attachment of Terminals to Studs 11-68
11-176. Studs and Insulators 11-68
11-177. Wire Terminals and Binding Posts 11-69
11-178. Crimp On Terminal Lugs and Splices 11-69
11-179. Lock Washers for Terminals On Equipment 11-70
11-180.—11-184. [RESERVED.] 11-70

SECTION 15. GROUNDING AND BONDING

11-185. General 11-71
11-186. Grounding 11-71
11-187. Bonding 11-73
11-188. Bonding Inspection 11-73
Figure 11-19. Millivolt Drop Test 11-74
11-189. Bonding Jumper Installations 11-75
Table 11-14. Stud Bonding or Grounding to Flat Surface 11-76
Table 11-15. Plate Nut Bonding or Grounding to Flat Surface 11-77
Table 11-16. Bolt and Nut Bonding or Grounding to Flat Surface 11-78
Figure 11-20. Copper Jumper Connector to Tubular Structure 11-79
Figure 11-21. Bonding Conduit to Structure 11-79
Figure 11-22. Aluminum Jumper Connection to Tubular Structure 11-79
11-190. Creepage Distance 11-75
11-191. Fuel Systems 11-80
11-192. Electric Shock Prevention Bonding 11-80
11-193. Lightning Protection Bonding 11-80
11-194. Lightning Protection for Antennas and Air Data Probes 11-81
11-195. Static-Discharge Devices 11-81
11-196. Cleaning 11-81
11-197. Hardware Assembly 11-81
11-198.—11-204. [RESERVED.] 11-81

SECTION 16. WIRE MARKING

11-205. General 11-83
11-206. Wire Identification 11-83
11-207. Identification and Information Related to the Wire and Wiring Diagrams 11-83
11-208. Placement of Identification Markings 11-83
Figure 11-23. Spacing of Printed Identification Marks (Direct Marking) 11-84
Figure 11-24. Spacing of Printed Identification Marks (Indirect Marking) 11-84
11-209. Types of Wire Markings 11-83
11-210. Hot Stamp Marking 11-84

CONTENTS (CONTINUED)

Paragraph Page

11-211. Dot Matrix Marking 11-85
11-212. Ink Jet Marking 11-85
11-213. Laser Marking 11-85
11-214. Identification Sleeves 11-85
11-215. Identification Tape 11-86
11-216. Operating Conditions 11-86
11-217. Installation of Printed Sleeves 11-86
Table 11-17. Recommended Size of Identification Sleeving 11-86
11-218. Identification of Wire Bundles and Harnesses 11-86
Figure 11-25. Identification of Wire Bundles and Harnesses 11-87
11-219. Terminal Marking Sleeve and Tags 11-87
Figure 11-26. Standard Sleeves (135 °C) 11-87
Figure 11-27. Installation of Heat-Shrinkable Insulation Sleeves 11-87
11-220. Sleeves and Cable Markers Selection 11-87
Figure 11-28. Cable Markers 11-88
Figure 11-29. Tie-Down Strap Installation 11-88
Table 11-18. Selection Table for Standard Sleeves 11-88
Table 11-19. Selection Table for Thin-Wall Sleeves 11-89
Table 11-20. Selection Table for High-Temperature Sleeves 11-89
Table 11-21. Selection Table for Cable Markers 11-89
Table 11-22. Plastic Tie-Down Straps (MS3367, Type I, Class 1) 11-89
Figure 11-30. Tie-Down Strap Installation Tool 11-90
Figure 11-31. Completed Installation 11-90
11-221. Temporary Wire and Cable Marking Procedure 11-90
Figure 11-32. Temporary Wire Identification Marker 11-90
11-222. Marker Sleeve Installation After Printing 11-90
Figure 11-33. Inserting Wire Into Marker 11-90a
Figure 11-34. Shrinking Marker on Wire 11-90a
11-223.—11-229. [RESERVED.] 11-90a

SECTION 17. CONNECTORS

11-230. General 11-91
11-231. Selection 11-91
11-232. Types of Connectors 11-91
Figure 11-35. Connector Information Example 11-91b
Figure 11-36. Different Types of Connectors 11-93
Figure 11-37. Coax Cable Connectors 11-94
11-233. Voltage and Current Rating 11-91a
11-234. Spare Contacts (Future Wiring) 11-97
11-235. Installation 11-97
11-236. Feed-Through Bulkhead Wire Protection 11-98
11-237. Special Purpose Connector 11-98
11-238. Potting Compounds 11-98
11-239. Potting Connectors 11-98
Figure 11-38. Spare Wires for Potting Connector 11-99
11-240. Through Bolts 11-99
11-241.—11-247. [RESERVED.] 11-99

CONTENTS (CONTINUED)

Paragraph Page

SECTION 18. CONDUITS

11-248. General 11-101
11-249. Size of Conduit 11-101
11-250. Conduit Fittings 11-101
11-251. Conduit Installation 11-101
11-252. Rigid Conduit 11-101
Table 11-23. Bend Radii for Rigid Conduit 11-101
11-253. Flexible Conduit 11-102
Table 11-24. Minimum Bending Radii for Flexible Aluminum or Brass Conduit 11-102
11-254.—11-259. [RESERVED.] 11-102

SECTION 19. PROTECTION OF UNUSED CONNECTORS

11-260. General 11-103
11-261. Quick Reference Chart 11-103
Table 11-25. Contact Cavity Sealing-Quick Reference 11-104
11-262. Unpressurized Area Connectors 11-103
Figure 11-39. Stub Wire Installation 11-104
Table 11-26. Sealing Rod Dimensions 11-104
11-263. Pressurized Areas 11-103
Figure 11-40. Sealing Unused Contact Cavities-Unpressurized Areas-(Cut-Away View) 11-104
11-264.—11-270. [RESERVED.] 11-104

SECTION 20. ELECTRICAL AND ELECTRONIC SYMBOLS

11-271. General 11-105
11-272. Symbols 11-105
Table 11-27. Electronic/Electrical Symbols 11-105
11-273.—11-283. [RESERVED.] 11-118

CHAPTER 12. AIRCRAFT AVIONICS SYSTEMS

SECTION 1. AVIONICS EQUIPMENT MAINTENANCE

12-1. General 12-1
12-2. Handling of Components 12-1
12-3.—12-7. [RESERVED.] 12-1

SECTION 2. GROUND OPERATIONAL CHECKS FOR AVIONICS EQUIPMENT (ELECTRICAL)

12-8. General 12-3
12-9. Inspection of Avionics System 12-3
12-10. Communication Systems 12-4

CONTENTS (CONTINUED)

Paragraph Page

12-11. VHF Omni-Directional Range (VOR) 12-5
12-12. Distance Measuring Equipment (DME) 12-5
12-13. Automatic Direction Finder (ADF) 12-5
12-14. Instrument Landing Systems (ILS) 12-6
12-15. Marker Beacon 12-6
12-16. Long Range Navigation (LORAN) 12-6
12-17. Global Positioning System (GPS) 12-7
12-18. Autopilot Systems 12-7
12-19. Altimeters 12-7
12-20. Transponders 12-8
12-21. Emergency Locator Transmitters (ELT) 12-8
12-22. Inspection of ELT 12-8
12-23. Flight Data Recorder 12-9
12-24. Cockpit Voice Recorders (CVR) 12-10
12-25. Weather Radar 12-10
12-26. Radome Inspection. 12-11
12-27. Data Bus 12-11
12-28.—12-36. [RESERVED.] 12-11

SECTION 3. GROUND OPERATIONAL CHECKS FOR AVIONICS EQUIPMENT (NON ELECTRICAL)

12-37. Compass Check Swing 12-13
12-38. Pneumatic Gyros 12-15
Figure 12-1. Venturi System For Providing Airflow Through Gyro Instruments 12-15
Figure 12-2. Instrument Vacuum System Using a Wet-Type Vacuum Pump 12-17
Figure 12-3. Instrument Vacuum system Using a Dry-Type Air Pump 12-18
Figure 12-4. Instrument Pressure System Using a Dry-Type Air Pump 12-18
12-39.—12-50. [RESERVED.] 12-18

SECTION 4. PITOT/STATIC SYSTEM

12-51. General 12-19
12-52. System Components 12-19
Figure 12-5. Pitot/Static system for a small aircraft 12-19
12-53. Pitot/Static Tubes and Lines 12-19
12-54. Static Ports 12-19
12-55. Heater Elements 12-19
Figure 12-6. Pitot/Static Tube Head 12-20
12-56. System Inspection 12-19
12-57. System Leak Test 12-20
12-58. Static System Test 12-21
12-59. Test Pitot System 12-21
12-60. Maintenance Precautions 12-21
12-61. Replacing Lines 12-22
12-62. Relocation of Pitot Tube 12-22
12-63. Troubleshooting the Pitot/Static Pressure System 12-22
Table 12-1. color codes for pitot-static systems 12-23
12-64.—12-69. [RESERVED.] 12-23

CONTENTS (CONTINUED)

Paragraph Page

SECTION 5. AVIONICS TEST EQUIPMENT

12-70. General 12-25
12-71. Test Equipment Calibration Standards 12-25
12-72. Test Equipment Calibration 12-25
12-73.—12-83. [RESERVED.] 12-25

CHAPTER 13. HUMAN FACTORS

13-1. Human Factors Influence on Mechanic's Performance 13-1
13-2 The FAA Aviation Safety Program 13-1
Figure 13-1. Personal Minimum's Checklist 13-1

APPENDIX 1. GLOSSARY. (10 PAGES)

APPENDIX 2. ACRONYMS AND ABBREVIATIONS (4 PAGES)

APPENDIX 3. METRIC-BASED PREFIXES AND POWERS OF 10 (1 PAGE)

TABLE 1-1. Selection and Properties of Aircraft Wood. (See notes following table.) (continued)

2. Defects Not Permitted.

a. Cross grain. Not acceptable, unless within limitations noted in 1a.

b. Wavy, curly, and interlocked grain. Not acceptable, unless within limitations noted in 1b.

c. Hard knots. Not acceptable, unless within limitations noted in 1c.

d. Pin knot clusters. Not acceptable, if they produce large effect on grain direction.

e. Spike knots. These are knots running completely through the depth of a beam perpendicular to the annual rings and appear most frequently in quarter-sawed lumber. Reject wood containing this defect.

f. Pitch pockets. Not acceptable, unless within limitations noted in 1e.

g. Mineral streaks. Not acceptable, if accompanied by decay (see 1f).

h. Checks, shakes, and splits. Checks are longitudinal cracks extending, in general, across the annual rings. Shakes are longitudinal cracks usually between two annual rings. Splits are longitudinal cracks induced by artificially induced stress. Reject wood containing these defects.

i. Compression wood. This defect is very detrimental to strength and is difficult to recognize readily. It is characterized by high specific gravity, has the appearance of an excessive growth of summer wood, and in most species shows little contrast in color between spring wood and summer wood. In doubtful cases reject the material, or subject samples to toughness machine test to establish the quality of the wood. Reject all material containing compression wood.

j. Compression failures. This defect is caused from the wood being overstressed in compression due to natural forces during the growth of the tree, felling trees on rough or irregular ground, or rough handling of logs or lumber. Compression failures are characterized by a buckling of the fibers that appear as streaks on the surface of the piece substantially at right angles to the grain, and vary from pronounced failures to very fine hairlines that require close inspection to detect. Reject wood containing obvious failures. In doubtful cases reject the wood, or make a further inspection in the form of microscopic examination or toughness test, the latter means being the more reliable.

k. Decay. Examine all stains and discoloration carefully to determine whether or not they are harmless, or in a stage of preliminary or advanced decay. All pieces must be free from rot, dote, red heart, purple heart, and all other forms of decay.

fittings and wire bracing and checking or splitting of wood members. A few suggestions for minimizing these shrinkage effects are:

(1) Use bushings that are slightly short so that when the wood member shrinks the bushings do not protrude and the fittings may be tightened firmly against the member.

(2) Gradually drop off plywood faceplates by feathering as shown in figure 1-2.

(3) Thoroughly seal all wood surfaces, particularly end grain and bolt holes, with varnish, epoxy, or other acceptable sealer to slow or prevent moisture changes in the member. (See Section 5. Finishing Wood Structures.)

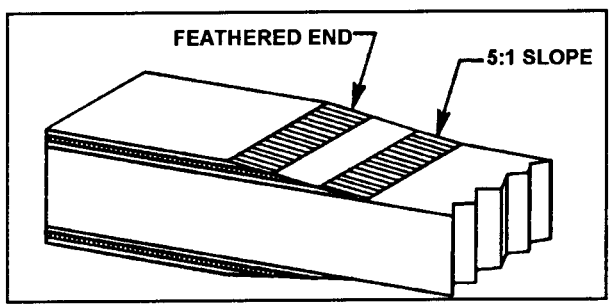

FIGURE 1-2. Tapering of faceplate.

1-3. MODIFIED WOOD PRODUCTS.

The most common forms of modified woods found in aircraft construction are plywood. Although not a wood product, Phenolic parts are sometimes incorporated into structures. These products are used whenever the manufacturer requires specialized strength or durability characteristics.

1-4. ADHESIVES.

Because of the critical role played by adhesives in aircraft structure, the mechanic must employ only those types of adhesives that meet all of the performance requirements necessary for use in certificated civil aircraft. Use each product strictly in accordance with the aircraft and adhesive manufacturer's instructions.

a. Adhesives acceptable to the FAA can be identified in the following ways:

(1) Refer to the aircraft maintenance or repair manual for specific instructions on acceptable adhesive selection for use on that type aircraft.

(2) Adhesives meeting the requirements of a Military Specification (Mil Spec), Aerospace Material Specification (AMS), or Technical Standard Order (TSO) for wooden aircraft structures are satisfactory providing they are found to be compatible with existing structural materials in the aircraft and the fabrication methods to be used in the repair.

b. Common types of adhesives that are or have been used in aircraft structure fall into two general groups: casein and synthetic-resins. Adhesive technology continues to evolve, and new types (meeting the requirements of paragraph 1-4a) may become available in the future.

(1) Casein adhesive performance is generally considered inferior to other products available today, modern adhesives should be considered first.

CAUTION: Casein adhesive deteriorates over the years after exposure to moisture in the air and temperature variations. Some modern adhesives are incompatible with casein adhesive. If a joint that has previously been bonded with casein is to be rebonded with another type adhesive, all traces of the casein must be scraped off before the new adhesive is applied. If any casein adhesive is left, residual alkalinity may cause the new adhesive to fail to cure properly.

(2) Synthetic-resin adhesives comprise a broad family which includes plastic resin glue, resorcinol, hot-pressed Phenol, and epoxy.

(3) Plastic resin glue (urea-formaldehyde resin glue) has been used in wood aircraft for many years. Caution should be used due to possible rapid deterioration (more rapidly than wood) of plastic resin glue in hot, moist environments and under cyclic swell-shrink stress. For these reasons, urea-formaldehyde should be considered obsolete for all repairs. Any proposed use of this type adhesive should be discussed with the appropriate FAA office prior to using on certificated aircraft.

(4) Federal Specification MMM-A-181D and Military Specification MIL-A-22397 both describe a required series of tests that verify the chemical and mechanical properties of resorcinol. Resorcinol is the only known adhesive recommended and approved for use in wooden aircraft structure and fully meets necessary strength and durability requirements. Resorcinol adhesive (resorcinol-formaldehyde resin) is a two-part synthetic resin adhesive consisting of resin and a hardener. The appropriate amount of hardener (per manufacturer's instruction) is added to the resin, and it is stirred until it is uniformly mixed; the adhesive is now ready for immediate use. Quality of fit and proper clamping pressure are both critical to the achievement of full joint strength. The adhesive bond lines must be very thin and uniform in order to achieve full joint strength.

CAUTION: Read and observe material safety data. Be sure to follow the manufacturer's instructions regarding mixing, open assembly and close assembly times, and usable temperature ranges.

(5) Phenol-formaldehyde adhesive is commonly used in the manufacturing of aircraft grade plywood. This product is cured at elevated temperature and pressure; therefore, it is not practical for use in structural repair.

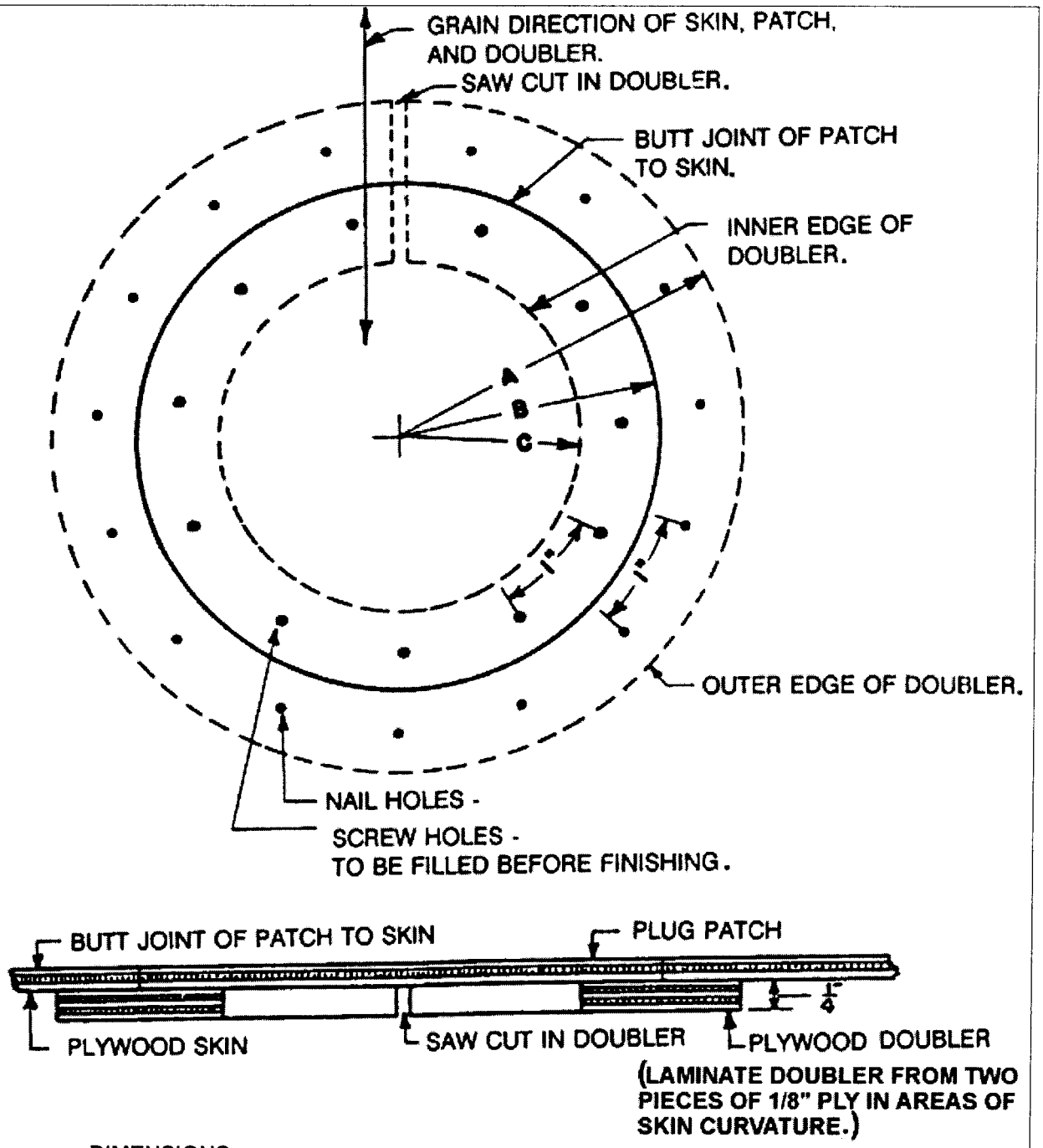

DIMENSIONS

	A	B	C
SMALL CIRCULAR PLUG PATCH	2 5/8	2	1 3/8
LARGE CIRCULAR PLUG PATCH	3 7/8	3	2 1/8

(TWO ROWS OF SCREWS AND NAILS REQUIRED FOR LARGE PATCH)

FIGURE 1-18. Round plug patch assembly.

1-53.—1-63. [RESERVED.]

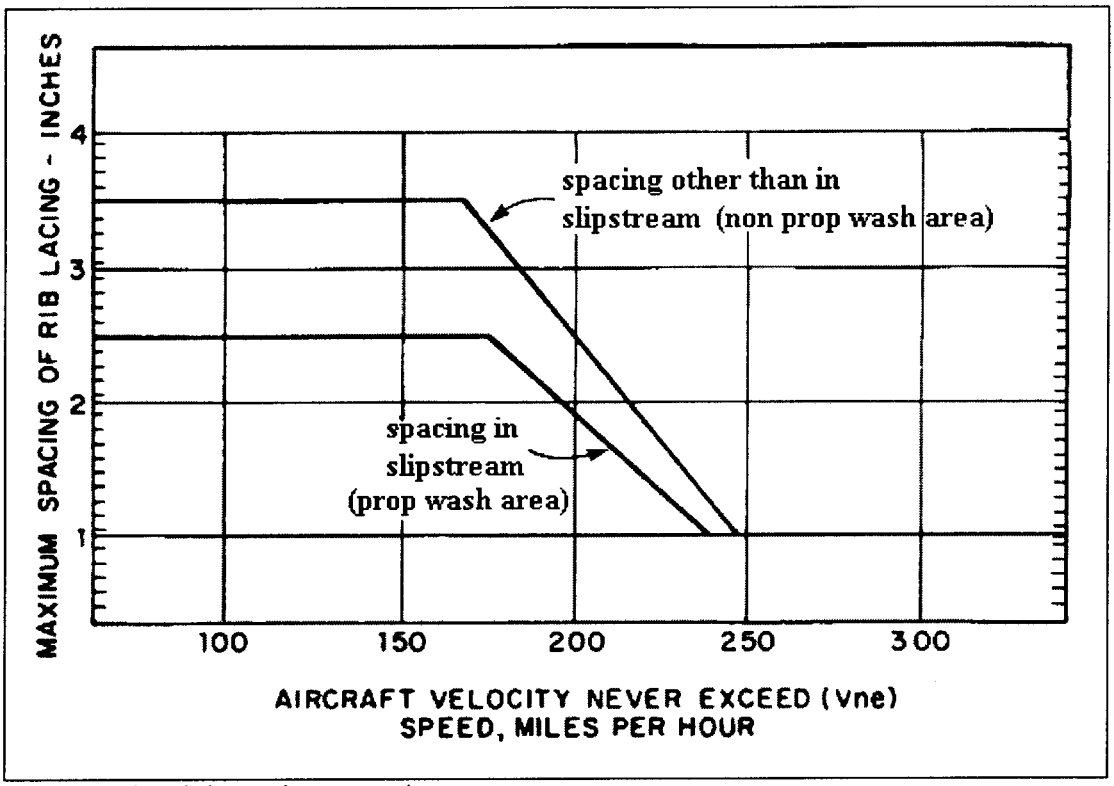

FIGURE 2-12. Fabric attachment spacing

b. When the original lace spacing on the empennage surfaces and fuselage, is not known, a maximum spacing of two times the spacing shown in figure 2-12 for the slipstream area (prop wash) on the wings may be used.

c. The installations of fabric attachments such as screws, rivets, wire clips, and rib lacing should be delayed until the fabric is stabilized and pulled taut with dope. This action is delayed to avoid pulling wing ribs and other structures out of alignment or tearing the fabric at attachment points as the fabric becomes taut. All lacing should be installed adjacent to the structure to which the fabric is being laced, to avoid tearing the fabric and/or creating slack in the cord loop when a load is applied. Where plastic washers were used by the aircraft manufacturer to provide increased pull-through resistance, under the heads of rivets or screws, the same diameter aluminum washer may be used as replacement. Aluminum washers are used because they are not affected by solvents found in adhesives or dopes, nor do they become brittle because of age or cold weather.

2-12. FASTENERS. Several light aircraft designs employ screws, rivets, or single-wire metal clips to secure the fabric to the wing.

a. Screws holding the old fabric can be removed after spinning a small sharpened tube around each screw or using a razor blade to cut and peel away the finishing tape. Care must be taken not to mark or scribe the underlying metal or wood structure. Blind rivets through ribs can be removed by drilling in the center to undercut the head.

b. Single-wire clips may be removed without damage to the rib by inserting a wide, thin screwdriver blade under the clip and carefully twisting. Apply a lifting force at the clip end to pull it up through the hole.

NOTE: It is important that any damage found to ribs, such as oversize rivet or screw holes, and cracks or breaks in the rib cap, should be tagged immediately for easy location and repair later.

c. When repairs are made to fabric surfaces attached by special mechanical methods, duplicate the original type of fastener. When self-tapping screws are used for the attachment of fabric to the rib structure, observe the following procedure:

(1) Redrill the holes where necessary due to wear, distortion, etc., and in such cases, use a screw one size larger as a replacement.

(2) Extend the length of the screw beyond the rib capstrip at least two threads.

(3) Install a thin washer, preferably aluminum, under the heads of screws and dope pinked-edge tape over each screw head.

2-13. FINISHING TAPE.

a. Finishing tape (surface tape) is installed after the fabric has been pulled taut with the initial dope application. This procedure is performed to prevent ripples from forming in fabric panels adjacent to newly applied tapes. Ripple formation is caused by the inability of the combined tape and fabric to tighten uniformly with adjacent fabric when additional dope is applied.

b. In addition to the tape widths required to be installed over fabric seams specified in paragraph 2-7, finishing tape should be installed as weather protection over all rib lacing, screws, rivets, wire clips, or other devices used to secure fabric. This includes wings, control surface ribs, empennage surface ribs, and fuselage stringers, where so installed by the original aircraft manufacturer. Tape width should be sufficient to bond the fabric a minimum of 3/8 inch on each side of all fabric attachments. Two inch width tape is normally used. Tapes over wing rib lacing should extend a minimum of 1/2 inch past each end of any reinforcing tapes. Random or widely-spaced attachments may be covered by individual sections of fabric or finishing tape.

c. Installation of finishing tapes for additional wear resistance is recommended over the edges of all fabric-forming structures. This includes fuselage stringers, longerons, leading and trailing edges, false or nose ribs, control surfaces, and empennage ribs not already covered and protected by a finishing tape that is required to be on a fabric seam or fabric attached to the structure. Compound surfaces, such as wingtip bow and empennage surfaces, are more conveniently taped using bias cut finishing tape, which easily conforms to the compound contour, rather than notching linear cut tape to fit the surface. Bias cut tape will be reduced to approximately two thirds the original cut width when pulled tight around a wingtip bow and should be considered when selecting the width of tape for the various locations.

d. Finishing tapes are applied by coating the fabric surface over which the tape will be applied with dope, applying the tape over the wet dope film, then brushing the tape firmly onto the fabric surface. This action will assure a good bond by thoroughly saturating and wetting the finishing tape.

2-14. INSPECTION RINGS AND DRAIN GROMMETS.

a. Inspection Rings. Inspection access is provided adjacent to or over every control bellcrank, drag-wire junction, cable guide, pulley, wing fitting, or any other component throughout the aircraft which will be inspected or serviced annually. They are installed only

on the bottom side of the wings except where installed on the top surface by the original manufacturer.

(1) Cutting the holes may be delayed until needed; however, all covers should be finished in matching colors with any trim lines and stored until needed. Spraying matching colors a year later is expensive and time consuming.

(2) The 3-9/16 inch inside diameter cellulose acetate butyrate (CAB) plastic inspection access rings have become popular and bond satisfactorily with Nitrate Dope or Fabric Cement. Any metal inspection hole reinforcements of a particular shape or special design or size, installed by the original manufacturer, should be reinstalled after cleaning.

(3) Tapes or patches over aluminum reinforcements are optional, but recommended in the prop-wash areas on the wings and forward fuselage bottom.

(4) Fabric patches over plastic rings are strongly recommended because plastic is not a stable material, becomes brittle at low temperatures, and fatigues and cracks from prop blast vibration. Plastic rings are often cracked during removal and installation of spring, clip-held covers. Patches with a minimum 1-inch overlap, should be installed with dope.

b. Drain Grommets. Atmospheric temperature changes cause the humidity in the air to condense on the inside of aircraft surfaces and pool in all low areas. Rainwater enters through openings in the sides and top, and when flying, everywhere throughout the structure. Taxiing on wet runways also splashes water up through any bottom holes. Therefore, provisions must be made to drain water from the lowest point in each fabric panel or plywood component throughout the airframe while in a stored attitude. Drain holes also provide needed ventilation.

(1) Install drain grommets on the under side of all components, at the lowest point in each fabric panel, when the aircraft is in stored attitude. Seaplane grommets, which feature a protruding lip to prevent water splashes through the drain hole, are recommended over drain holes subject to water splashing on land planes as well as seaplanes. The appropriate-size holes must be cut through the fabric before installing seaplane grommets. Plastic drain grommets may be doped directly to the fabric surface or mounted on fabric patches then doped to the covering. Installing a small fabric patch over flat grommets to ensure security is optional. Alternate brass grommets are mounted on fabric patches, then doped to the fabric.

(2) After all coating applications and sanding are completed, open all holes through flat drain grommets by cutting through the fabric with a small-blade knife. Do not attempt to open drain holes by punching with a sharp object because the drain hole will not remain open.

2-15.—2-19. [RESERVED.]

identify the manufacturers' products sold under proprietary trade names may or may not have a fungicidal additive.

(5) The viscosity of the dope should be adjusted to uniformly wet the fabric, indicated by the fabric becoming translucent so that it penetrates through the fabric but does not drip or run down the opposite side. Any dope-runs or pooling on the opposite side will shrink and distort the fabric, and may be visible on the finished surface.

(6) The ideal temperature for application of dope or other coatings is 65 to 75 F and the humidity should be less than 65 percent. As a general rule, each 10 F increase or decrease in ambient temperature will increase or decrease drying time by 100 percent. Dope should be allowed to warm to room temperature prior to attempting to adjust the viscosity.

b. Step 2. Depending upon the quality of the dope and the ratio of thinning, the fabric should start to become taut after the first brushed coat of dope has dried approximately 1 hour at 70 °F. A second, heavier coat is applied by cross brushing at 90°F to the first coat. Viscosity should be adjusted only as necessary to brush out a heavy uniform coat. If the fabric is not taut, with all sag removed, after the second coat has dried approximately 2 hours, a third coat may be applied.

c. Step 3. After the fabric has become semi-taut and stabilized with the initial dope application, and the rib lacing and other fabric attachments are completed as detailed in paragraphs 2-9 through 2-12, it is ready for "dressing out" as described in paragraphs 2-13 and 2-14.

d. NOTE: "Dressing out" means applying all the finishing tapes, reinforcing patches, inspection access ports, and drain grommets, etc.

e. Step 4. After the covering is a dressed out, one or more coats of clear dope are brushed over all finishing tapes and fabric reinforcing patches. This will balance the thickness of the dope film with the previously coated areas of the fabric. It is very important that the porosity of the fabric be filled while brushing to avoid pinholes showing in the finish.

f. Step 5. After drying at least 2 hours at 70 °F, a third heavy coat of clear dope is applied over the entire surface, preferably with a paint spray gun if brush marks are to be avoided. After the third coat of dope has dried at least 2 hours at 70 °F, the fabric should be taut and the dope film should show a gloss, depending upon the dope quality and the ratio of thinner added. If not, a fourth coat of clear dope may be applied, in the same manner as the third coat.

NOTE: Three to four clear coats of dope film showing a uniform gloss combined with the aluminum-pigmented coats and finish coats is considered satisfactory for light aircraft up to 9 lb. per square foot wing loading. Five to eight clear coats, depending upon the quality of the dope and resulting film thickness, are recommended for higher wing loading aircraft to assure the covering does not stretch and lose tension.

g. Step 6. After the clear coats are found to be satisfactory, two heavy cross-coats of aluminum-pigmented dope are applied with a spray gun to provide protection from ultraviolet (UV) rays. Tests have shown that UV radiation will deteriorate cotton, linen, and polyester fabric; however, polyester fabric deteriorates at a rate half that of cotton or linen under identical exposure conditions. UV radiation

does not deteriorate glass fabric. Aluminum-pigmented dope blocks UV radiation and provides a sanding base. A gauge of ultraviolet protection in the field is to block all visible light from penetrating through the fabric. Drying time between the two coats should be at least 1 hour at 70 °F.

(1) An option to premixed aluminum dope is to use aluminum-pigment paste. Aluminum paste should be prepared per the manufacturer's instructions. If no manufacturer's instructions are available, mix 3 ounces (by weight), of 325-mesh aluminum-pigment paste, to 1 gallon of unthinned, clear dope. The aluminum paste should first be mixed to a cream consistency with a 50/50 ratio of dope and thinner before mixing into the unthinned clear dope. A higher ratio of aluminum-pigment added to the dope may cause a loss of primer-coat and finish-coat adhesion, and peeling may occur especially when high tack tape is used to mask for the trim colors and registration numbers.

(2) The viscosity of the mixed aluminum-pigmented dope should be adjusted for satisfactory spray gun application.

h. Step 7. After two coats of aluminum-pigmented dope have dried at least 4 hours at 70 °F, the surface may be wet sanded with # 280 grit (or finer) waterproof sandpaper. The aluminum-pigmented dope should be sanded only to develop a smooth surface, not sanded completely off to the clear dope undercoats. Do not sand over screwheads, rib lacing, or any structural sharp edges that will quickly cut through fabric and require patching. Additional coats of aluminum-pigmented dope may be applied and sanded, depending on the final finish desired. The last coat should not be sanded to assure ultraviolet protection along the edges of the finishing tapes and reinforcing patches is maintained.

i. Step 8. Three coats of pigmented color finish are applied with a paint spray gun, allowing adequate drying time between coats. The color finish may be wet sanded between coats, if desired, with a fine grit waterproof sandpaper. Adding blush retarder to the final dope finish will improve the gloss. After drying several weeks, a rubbing compound may be used to buff the finish and increase the gloss. A periodic application of a wax polish will help protect the finish from the weather and environmental pollution.

NOTE: Drain holes should be opened soon after all finishing is complete to insure drainage and to aid ventilation of the structure.

(1) When exposed to the sun, dark colors absorb more sun energy and convert that energy to heat more easily than light colors. High temperatures dry out wood structures and deteriorate organic materials in an aircraft structure. Preferably the lighter color shades are applied first and then overcoated with darker trim and registration number colors.

(2) Only high-quality, solvent-resistant crepe paper or polypropylene masking tape should be used to avoid finish bleed under the tape edge. Newspaper printing ink may transfer to a fresh finish and should not be used for masking paper. Plastic sheeting should not be used as a dust cover on a fresh finish due to possible bonding and damage.

2-22. COVERING OVER PLYWOOD.

Exposed, stressed plywood surfaces, such as wings, must be protected from weather

SECTION 3. INSPECTION AND TESTING

2-30. GENERAL. All components of the covering should be inspected for general condition. Loose finishing tape and reinforcing patches; chafing under fairings; brittle, cracking, peeling, or deteriorated coatings; fabric tears and rock damage; broken or missing rib lacing; and rodent nests are unacceptable. The entire fabric covering should be uniformly taut with no loose or wrinkled areas, or excess tension which can warp and damage the airframe.

a. Excess Tension. There are no methods or specifications for measuring acceptable fabric tension other than observation. Excess tension may warp critical components, such as longerons, wing rib, and trailing edges out of position, weakening the airframe structure.

(1) Excess tension with cotton, linen, and glass fiber fabric covering is usually caused by excessive dope film on a new covering, or continuous shrinking of an originally satisfactory dope film as the plasticizers migrate from the dope with age. Heat from sun exposure accelerates plasticizer migration.

(2) Excess tension with polyester fabric, coated with dope, is usually caused by the combined tension of the heat tautened polyester fabric and continuous shrinking of the dope film as the plasticizers migrate from the dope with age.

b. Loose Fabric. Fabric that flutters or ripples in the propeller slipstream, balloons, or is depressed excessively in flight from the static position, is unacceptable.

(1) Loose or wrinkled cotton, linen, and glass fabric covering may be caused by inadequate dope film; poor quality dope; fabric installed with excess slack; or by a bent, broken, or warped structure.

(2) Loose or wrinkled polyester fabric covering, finished with coatings other than dope, may be caused by inadequate or excessive heat application; excess slack when the fabric was installed; or bent or warped structure. Polyester fabric which does not meet aircraft quality specifications will very likely become loose after a short period of time.

(3) Glass fabric covering should be tested with a large suction cup for rib lacing cord failure and reinforcing tape failure caused by chafing on all wing ribs and other structural attachments throughout the airframe. Particular attention should be given to the area within the propeller slipstream. If failure is indicated by the covering lifting from the static position, the rib lacing cord and reinforcing tape must be reinstalled with double the number of original laces.

NOTE: Temporary wrinkles will develop in any fabric coated and finished with dope, when moisture from rain, heavy fog, or dew is absorbed into a poor-quality dope film, causing the film to expand. Temporary wrinkles may also develop with any type of thick coatings, on any type of fabric, when an aircraft is moved from a cold storage area to a warm hangar or parked in the warming sunshine, causing rapid thermal expansion of the coating.

c. Coating Cracks. Fabric exposed through cracks in the coating may be initially tested for deterioration by pressing firmly with a thumb to check the fabric's strength. Natural fibers deteriorate by exposure to ultraviolet radiation, mildew, fungus from moisture, high acid-content rain, dew, fog, pollution, and age. Polyester filaments will deteriorate by exposure to UV radiation.

(1) Glass fabric will not deteriorate from UV exposure, but will be deteriorated by acid rain, dew fallout, and chaffing if loose in the prop blast area.

(2) Cotton, linen, and glass fabric coverings are dependent solely on the strength and tautening characteristics of the dope film to carry the airloads. Dope coatings on heat-tautened polyester fabric will also absorb all the airloads because the elongation of polyester filaments are considerably higher than the dope film. Polyester fabric that is coated with materials other than dope, is dependent solely on the heat tautening and low-elongation characteristics of the polyester filaments to develop tension and transmit the airloads to the airframe without excess distortion from a static position.

(3) Cracks in coatings will allow any type of exposed fabric to deteriorate. Cracks should be closed by sealing or removing the coatings in the immediate area and replace with new coatings, or recover the component.

2-31. FABRIC IDENTIFICATION.

Cotton Fabric meeting TSO-C15 or TSO-C14 can be identified by an off-white color and thread count of 80 to 94 for TSO-C14b and 80 to 84 for TSO-C15d in both directions.

a. **Aircraft linen** conforming to British specification 7F1 may be identified by a slightly darker shade than cotton fabric and irregular thread spacing. The average thread count will be about the same as Grade A fabric (TSO-C15d). The non-uniformity of the linen thread size is also noticeable, with one thread half the size of the adjacent thread. When viewed under a magnifying glass, the ends of the cotton and linen fiber nap may be seen on the backside. The nap is also seen when the coating is removed from the front or outside surface. A light-purple color showing on the back side of cotton or linen fabric indicates a fungicide was present in the dope to resist deterioration by fungus and mildew.

b. **Polyester fabric** conforming to TSO-C14b or TSO-C15d is whiter in color than cotton or linen. The fabric styles adapted for use as aircraft covering have a variety of thread counts, up to ninety-four (94), depending on the manufacturing source, weight, and breaking strength. Polyester is a monofilament and will not have any nap or filament ends showing.

c. **Glass fabric** is manufactured white in color, and one source is precoated with a blue-tinted dope as a primer and to reduce weave distortion during handling. Thread count will be approximately 36 threads per inch. Glass fabrics are monofilament and will not have any nap or filament ends showing unless they are inadvertently broken.

d. **When a small fabric sample can be removed** from the aircraft and all the coatings removed, a burn test will readily distinguish between natural fabric, polyester, and glass fabric. Cotton and linen will burn to a dry ash, polyester filaments will melt to a liquid and continue burning to a charred ash, and glass filaments, which do not support combustion, will become incandescent over a flame.

2-32. COATING IDENTIFICATION.

Nitrate or butyrate dope must be used to develop tension on cotton, linen, and glass fabrics. When a small sample can be removed, burn tests will distinguish nitrate dope-coated fabric from butyrate dope-coated fabric by its immediate ignition and accelerated combustion. Butyrate dope will burn at less than one-half the rate of nitrate dope. Coating types other than nitrate or butyrate dope may have been used as a finish over dope on cotton, linen, and glass fiber fabric coverings.

CHAPTER 4. METAL STRUCTURE, WELDING, AND BRAZING

SECTION 1. IDENTIFICATION OF METALS

4-1. GENERAL. Proper identification of the aircraft structural material is the first step in ensuring that the continuing airworthiness of the aircraft will not be degraded by making an improper repair using the wrong materials.

a. Ferrous (iron) alloy materials are generally classified according to carbon content. (See table 4-1.)

TABLE 4-1. Ferrous (iron) alloy materials.

MATERIALS	CARBON CONTENT
Wrought iron	Trace to 0.08%
Low carbon steel	0.08% to 0.30%
Medium carbon steel	0.30% to 0.60%
High carbon steel	0.60% to 2.2%
Cast iron	2.3% to 4.5%

b. The strength and ductility, or toughness of steel, is controlled by the kind and quantity of alloys used and also by cold-working or heat-treating processes used in manufacturing. In general, any process that increases the strength of a material will also decrease its ductility.

c. Normalizing is heating steel to approximately 150 °F to 225 °F above the steel's critical temperature range, followed by cooling to below that range in still air at ordinary temperature. Normalizing may be classified as a form of annealing. This process also removes stresses due to machining, forging, bending, and welding. After the metal has been held at this temperature for a sufficient time to be heated uniformly throughout, remove the metal from the furnace and cool in still air. Avoid prolonging the soaking of the metal at high temperatures, as this practice will cause the grain structure to enlarge. The length of time required for the soaking temperature depends on the mass of the metal being treated. The soaking time is roughly ¼ hour per inch of the diameter of thickness (Ref: Military Tech Order (T.O.) 1-1A-9).

4-2. IDENTIFICATION OF STEEL STOCK. The Society of Automotive Engineers (SAE) and the American Iron and Steel Institute (AISI) use a numerical index system to identify the composition of various steels. The numbers assigned in the combined listing of standard steels issued by these groups represent the type of steel and make it possible to readily identify the principal elements in the material.

a. The basic numbers for the four digit series of the carbon and alloy steel may be found in table 4-2. The first digit of the four number designation indicates the type to which the steel belongs. Thus, "1" indicates a carbon steel, "2" a nickel steel, "3" a nickel chromium steel, etc. In the case of simple alloy steels, the second digit indicates the approximate percentage of the predominant alloying element. The last two digits usually indicate the mean of the range of carbon content. Thus, the designation "1020" indicates a plain carbon steel lacking a principal alloying element and containing an average of 0.20 percent (0.18 to 0.23) carbon. The designation "2330" indicates a nickel steel of approximately 3 percent (3.25 to 3.75) nickel and an average of 0.30 percent, (0.28 to 0.33) carbon content. The designation "4130" indicates a chromium-molybdenum steel of approximately 1 percent (0.80 to 1.10) chromium, 0.20 percent (0.15 to 0.25) molybdenum, and 0.30 percent (0.28 to 0.33) carbon.

b. There are numerous steels with higher percentages of alloying elements that do not fit into this numbering system. These include a large group of stainless and heat resisting alloys in which chromium is an essential alloying element. Some of these alloys are identified by three digit AISI numbers and many others by designations assigned by the steel company that produces them. The few examples in table 4-3 will serve to illustrate the kinds of designations used and the general alloy content of these steels.

c. "1025" welded tubing as per Specification MIL-T-5066 and "1025" seamless tubing conforming to Specification MIL-T-5066A are interchangeable.

4-3. INTERCHANGEABILITY OF STEEL TUBING.

a. "4130" welded tubing conforming to Specification MIL-T-6731, and "4130" seam-less tubing conforming to Specification MIL-T-6736 are interchangeable.

b. NE-8630 welded tubing conforming to Specification MIL-T-6734, and NE-8630 seamless tubing conforming to Specification MIL-T-6732 are interchangeable.

4-4. IDENTIFICATION OF ALUMINUM. To provide a visual means for identifying the various grades of aluminum and aluminum alloys, such metals are usually marked with symbols such as a Government Specification Number, the temper or condition furnished, or the commercial code marking. Plate and sheet are usually marked with specification numbers or code markings in rows approximately 5 inches apart. Tubes, bars, rods, and extruded shapes are marked with specification numbers or code markings at intervals of 3 to 5 feet along the length of each piece.

The commercial code marking consists of a number which identifies the particular composition of the alloy. In addition, letter suffixes (see table 4-4) designate the basic temper designations and subdivisions of aluminum alloys.

TABLE 4-2. Numerical system for steel identification.

TYPES OF STEELS	NUMERALS AND DIGITS
Plain carbon steel	10XX
Carbon steel with additional sulfur for easy machining.	11XX
Carbon steel with about 1.75% manganese	13XX
.25% molybdenum.	40XX
1% chromium, .25% molybdenum	41XX
2% nickel, 1% chromium, .25% molybdenum	43XX
1.7% nickel, .2% molybdenum	46XX
3.5% nickel, .25% molybdenum	48XX
1% chromium steels	51XX
1% chromium, 1.00% carbon	51XXX
1.5% chromium steels	52XX
1.5% chromium, 1.00% carbon	52XXX
1% chromium steel with .15% vanadium	61XX
.5% chromium, .5% nickel, .20% molybdenum	86XX
.5% chromium, .5% nickel, .25% molybdenum	87XX
2% silicon steels, .85% manganese	92XX
3.25% nickel, 1.20% chromium, .12% molybdenum	93XX

TABLE 4-3. Examples of stainless and heat-resistant steels nominal composition (percent)

ALLOY DESIGNATION	CARBON	CHROMIUM	NICKEL	OTHER	GENERAL CLASS OF STEEL
302	0.15	18	9		Austenitic
310	0.25	25	20		Austenitic
321	0.08	18	11	Titanium	Austenitic
347	0.08	18	11	Columbium or Tantalum	Austenitic
410	0.15	12.5			Martensitic, Magnetic
430	0.12	17			Ferritic, Magnetic
446	0.20	25		Nitrogen	Ferritic, Magnetic
PH15-7 Mo	0.09	15	7	Molybdenum, Aluminum	Precipitation Hardening
17-4 PH	0.07	16.5	4	Copper, Columbium or Tantalum	Precipitation Hardening

TABLE 4-4. Basic temper designations and subdivisions from aluminum alloys.

NON HEAT-TREATABLE ALLOYS		HEAT-TREATABLE ALLOYS	
Temper Designation	**Definition**	**Temper Designation**	**Definition**
-0	Annealed recrystallized (wrought products only) applies to softest temper of wrought products.	-0	Annealed recrystallized (wrought products only) applies to softest temper of wrought products.
-H1	Strain-hardened only. Applies to products which are strain-hardened to obtain the desired strength without supplementary thermal treatment.	-T1	Cooled from an elevated temperature shaping process (such as extrusion or casting) and naturally aged to a substantially stable condition.
-H12	Strain-hardened one-quarter-hard temper.	-T2	Annealed (castings only).
-H14	Strain-hardened half-hard temper.	-T3	Solution heat-treated and cold-worked by the flattening or straightening operation.
-H16	Strain-hardened three-quarters-hard temper.	-T36	Solution heat-treated and cold-worked by reduction of 6 percent
-H18	Strain-hardened full-hard temper.	-T4	Solution heat-treated.
-H2	Strain-hardened and then partially annealed. Applies to products which are strain-hardened more than the desired final amount and then reduced in strength to the desired level by partial annealing.	-T42	Solution heat-treated by the user regardless of prior temper (applicable only to 2014 and 2024 alloys).
-H22	Strain-hardened and partially annealed to one-quarter-hard temper.	-T5	Artificially aged only (castings only).
-H24	Strain-hardened and partially annealed to half-hard temper.	-T6	Solution heat-treated and artificially aged.
-H26	Strain-hardened and partially annealed to three-quarters-hard temper.	-T62	Solution heat-treated and aged by user regardless of prior temper (applicable only to 2014 and 2024 alloys).
-H28	Strain-hardened and partially annealed to full-hard temper.	-T351, -T451, -T3510, -T3511, -T4510, -T4511.	Solution heat-treated and stress relieved by stretching to produce a permanent set of 1 to 3 percent, depending on the product.
-H3	Strain-hardened and then stabilized. Applies to products which are strain-hardened and then stabilized by a low temperature heating to slightly lower their strength and increase ductility.	-T651, -T851, -T6510, -T8510, -T6511, -T8511.	Solution heat-treated, stress relieved by stretching to produce a permanent set of 1 to 3 percent, and artificially aged.
-H32	Strain-hardened and then stabilized. Final temper is one-quarter hard.	-T652	Solution heat-treated, compressed to produce a permanent set and then artificially aged.
-H34	Strain-hardened and then stabilized. Final temper is one-half hard.	-T8	Solution heat-treated, cold-worked and then artificially aged.
-H36	Strain-hardened and then stabilized. Final temper is three-quarters hard.	-T/4	Solution heat-treated, cold-worked by the flattening or straightening operation, and then artificially aged.
-H38	Strain-hardened and then stabilized. Final temper is full-hard.	-T86	Solution heat-treated, cold-worked by reduction of 6 percent, and then artificially aged.
-H112	As fabricated; with specified mechanical property limits.	-T9	Solution heat-treated, artificially aged and then cold-worked.
-F	For wrought alloys; as fabricated. No mechanical properties limits. For cast alloys; as cast.	-T10	Cooled from an elevated temperature shaping process artificially aged and then cold-worked.
		-F	For wrought alloys; as fabricated. No mechanical properties limits. For cast alloys; as cast.

4-5. - 4-15. [RESERVED.]

SECTION 4. METAL REPAIR PROCEDURES

4-50. GENERAL. The airframe of a fixed-wing aircraft is generally considered to consist of five principal units; the fuselage, wings, stabilizers, flight control surfaces, and landing gear.

a. Aircraft principal structural elements (PSE) and joints are designed to carry loads by distributing them as stresses. The elements and joints as originally fabricated are strong enough to resist these stresses, and must remain so after any repairs. Long, thin elements are called members. Some examples of members are the metal tubes that form engine mount and fuselage trusses and frames, beams used as wing spars, and longerons and stringers of metal-skinned fuselages and wings. Longerons and stringers are designed to carry principally axial loads, but are sometimes required to carry side loads and bending moments, as when they frame cutouts in metal-skinned structures. Truss members are designed to carry axial (tension and compression) loads applied to their ends only. Frame members are designed to carry side loads and bending moments in addition to axial loads. Beam members are designed to carry side loads and bending moments that are usually large compared to their axial loads. Beams that must resist large axial loads, particularly compression loads, in combination with side loads and bending moments are called beam-columns. Other structural elements such as metal skins, plates, shells, wing ribs, bulkheads, ring frames, intercostal members, gussets, and other reinforcements, and fittings are designed to resist complex stresses, sometimes in three dimensions.

b. Any repair made on an aircraft structure must allow all of the stresses to enter, sustain these stresses, and then allow them to return into the structure. The repair must be equal to the original structure, but not stronger or stiffer, which will cause stress concentrations or alter the resonant frequency of the structure.

c. All-metal aircraft are made of very thin sheet metal, and it is possible to restore the strength of the skin without restoring its rigidity. All repairs should be made using the same type and thickness of material that was used in the original structure. If the original skin had corrugations or flanges for rigidity, these must be preserved and strengthened. If a flange or corrugation is dented or cracked, the material loses much of its rigidity; and it must be repaired in such a way that will restore its rigidity, stiffness, and strength.

4-51. RIVETED (OR BOLTED) STEEL TRUSS-TYPE STRUCTURES. Repairs to riveted structures may be made employing the general principles outlined in the following paragraphs on aluminum alloy structures. Repair methods may also be found in text books on metal structures. Methods for repair of the major structural members must be specifically approved by the Federal Aviation Administration (FAA).

4-52. ALUMINUM ALLOY STRUCTURES. Extensive repairs to damaged stressed skin on monocoque-types of aluminum alloy structures must be made in accordance with FAA-approved manufacturer's instructions or other FAA-approved source.

a. Rivet Holes. Rivet holes are slightly larger than the diameter of the rivet. When driven, solid rivets expand to fill the hole. The strength of a riveted joint is based upon the expanded diameter of the rivet. Therefore, it is important that the proper drill size be used for each rivet diameter.

(1) The acceptable drill size for rivets may be found in Metallic Materials and Elements for Flight Vehicle Structure (MIL-HDBK-5).

(2) Avoid drilling oversized holes or otherwise decreasing the effective tensile areas of wing-spar capstrips, wing, fuselage, fin-longitudinal stringers, or highly-stressed tensile members. Make all repairs, or reinforcements, to such members in accordance with factory recommendations or with the specific approval of an FAA representative.

b. Disassembly Prior to Repairing. If the parts to be removed are essential to the rigidity of the complete structure, support the structure prior to disassembly in such a manner as to prevent distortion and permanent damage to the remainder of the structure. When rivets are removed, undercut rivet heads by drilling. Use a drill of the same size as the diameter of the rivet. Drilling must be exactly centered and to the base of the head only. After drilling, break off the head with a pin punch and carefully drive out the shank. On thin or unsupported metal skin, support the sheet metal on the inside with a bucking bar. Removal of rivet heads with a cold chisel and hammer is not recommended because skin damage and distorted rivet holes will probably result. Inspect rivet joints adjacent to damaged structure for partial failure by removing one or more rivets to see if holes are elongated or the rivets have started to shear.

c. Effective Tools. Care must also be taken whenever screws must be removed to avoid damage to adjoining structure. When properly used, impact wrenches can be effective tools for removal of screws; however, damage to adjoining structure may result from excessive vertical loads applied through the screw axis. Excessive loads are usually related to improperly adjusted impact tools or attempting to remove screws that have seized from corrosion. Remove seized screws by drilling and use of a screw extractor. Once the screw has been removed, check for structural cracks that may appear in the adjoining skin doubler, or in the nut or anchor plate.

4-53. SELECTION OF ALUMINUM FOR REPLACEMENT PARTS. All aluminum replacement sheet metal must be identical to the original or properly altered skin. If another alloy is being considered, refer to the information on the comparative strength properties of aluminum alloys contained in MIL-HDBK-5.

a. Temper. The choice of temper depends upon the severity of the subsequent forming operations. Parts having single curvature and straight bend lines with a large bend radius may be advantageously formed from heat-treated material; while a part, such as a fuselage frame, would have to be formed from a soft, annealed sheet, and heat-treated after forming. Make sure sheet metal parts which are to be left unpainted are made of clad (aluminum coated) material. Make sure all sheet material and finished parts are free from cracks, scratches, kinks, tool marks, corrosion pits, and other defects which may be factors in subsequent failure.

b. Use of Annealed Alloys for Structural Parts. The use of annealed aluminum alloys for structural repair of an aircraft is not recommended. An equivalent strength repair using annealed aluminum will weigh more than a repair using heat-treated aluminum alloy.

4-54. HEAT TREATMENT OF ALUMINUM ALLOY PARTS. All structural aluminum alloy parts are to be heat-treated in accordance with the heat-treatment instruction issued by the manufacturers of the part. In the case of a specified temper, the sequence of heat-treating operations set forth in

c. Rivet edge distance is defined as the distance from the center of the rivet hole to the nearest edge of the sheet. Rivet spacing is the distance from the center of the rivet hole to the center of the adjacent rivet hole. Unless structural deficiencies are suspected, the rivet spacing and edge distance should duplicate those of the original aircraft structure. If structural deficiencies are suspected, the following may be used in determining minimum edge distance and rivet spacing.

(1) For single row rivets, the edge distance should not be less than 2 times the diameter of the rivet and spacing should not be less than 3 times the diameter of the rivet.

(2) For double row rivets, the edge distance and spacing should not be less than the minimums shown in figure 4-5.

(3) For triple or multiple row rivets, the edge distance and spacing should not be less than the minimums shown in figure 4-5.

d. The 2117 rivets may be driven in the condition received, but 2017 rivets above 3/16 inch in diameter and all 2024 rivets are to be kept packed in dry ice or refrigerated in the "quenched" condition until driven, or be reheat treated just prior to driving, as they would otherwise be too hard for satisfactory riveting. Dimensions for formed rivet heads are shown in figure 4-6(a), together with commonly found rivet imperfections.

e. When solid shank rivets are impractical to use, then special fasteners are used. Special fastening systems used for aircraft construction and repair are divided into two types, special and blind fasteners. Special fasteners are sometimes designed for a specific purpose in an aircraft structure. The name "special fasteners" refers to its job requirement and the tooling needed for installation. Use of special fasteners may require an FAA field approval.

f. Blind rivets are used under certain conditions when there is access to only one side of the structure. Typically, the locking characteristics of a blind rivet are not as good as a driven rivet. Therefore, blind rivets are usually not used when driven rivets can be installed.

Blind rivets shall not be used:

(1) in fluid-tight areas;

(2) on aircraft in air intake areas where rivet parts may be ingested by the engine, on aircraft control surfaces, hinges, hinge brackets, flight control actuating systems, wing attachment fittings, landing gear fittings, on floats or amphibian hulls below the water level, or other heavily-stressed locations on the aircraft;

CAUTION: For metal repairs to the airframe, the use of blind rivets must be specifically authorized by the airframe manufacturer or approved by a representative of the FAA.

(3) Self plugging friction-lock cherry rivets. This patented rivet may be installed when there is access to only one side of the structure. The blind head is formed by pulling the tapered stem into the hollow shank. This swells the shank and clamps the skins tightly together. When the shank is fully upset, the stem pulls in two. The stem does not fracture flush with the rivet head and must be trimmed and filed flush for the installation to be complete. Because of the friction-locking stem, these rivets are very sensitive to vibrations. Inspection is visual, with a loose rivet standing out in the standard "smoking rivet" pattern. Removal consists of punching out the friction-

locked stem and then treating it like any other rivet. (See figure 4-7.)

(4) Mechanical-lock rivets have a device on the puller or rivet head which locks the center stem into place when installed. Many friction-lock rivet center stems fall out due to vibrations; this in turn, greatly reduces its shear strength. The mechanical-lock rivet was developed to prevent that problem. Various manufacturers make mechanical-lock fasteners such as: Bulbed Cherrylock, CherryMax, Olympic-Loks, and Huck-Loks.

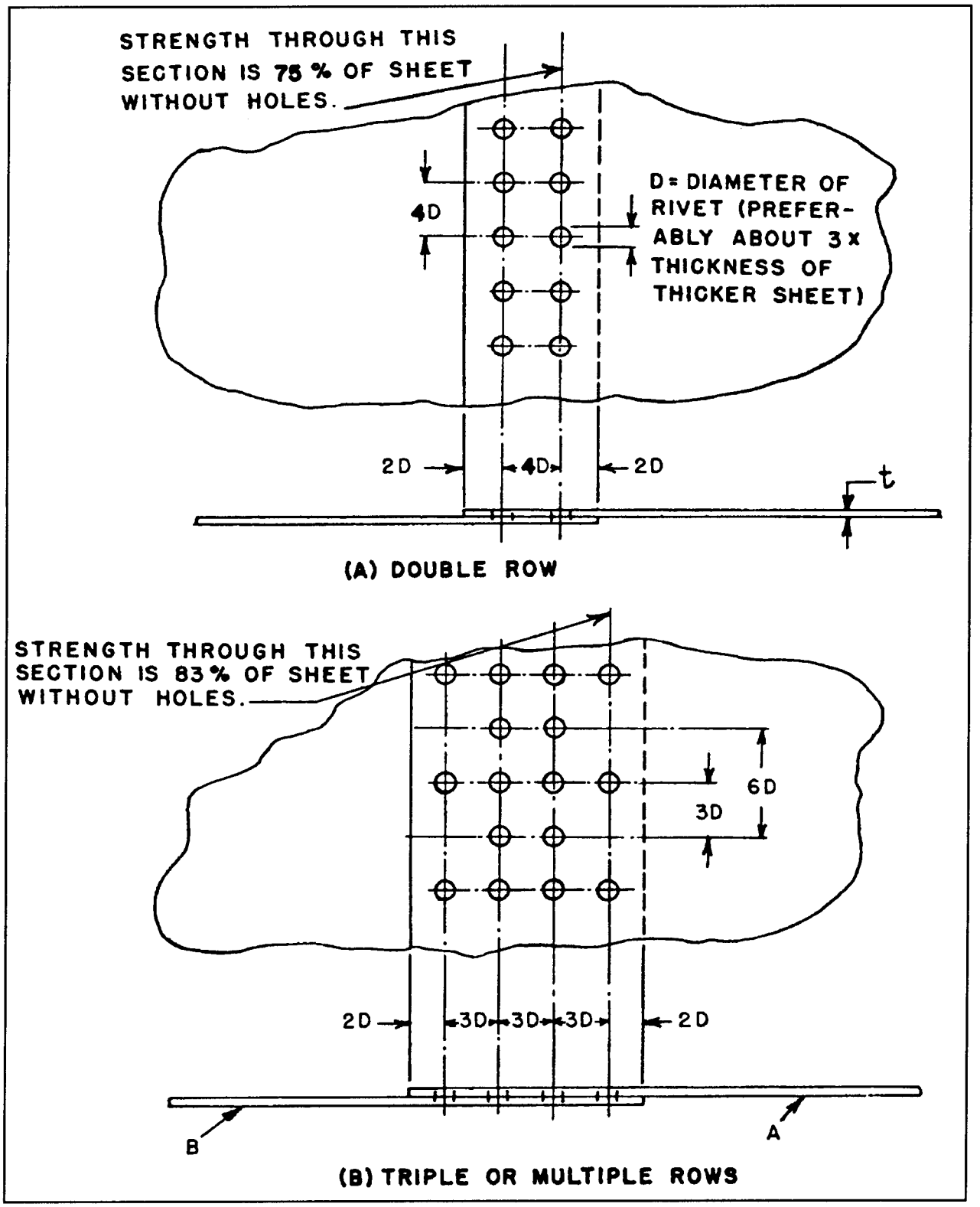

FIGURE 4-5. Rivet hole spacing and edge distance for single-lap sheet splices.

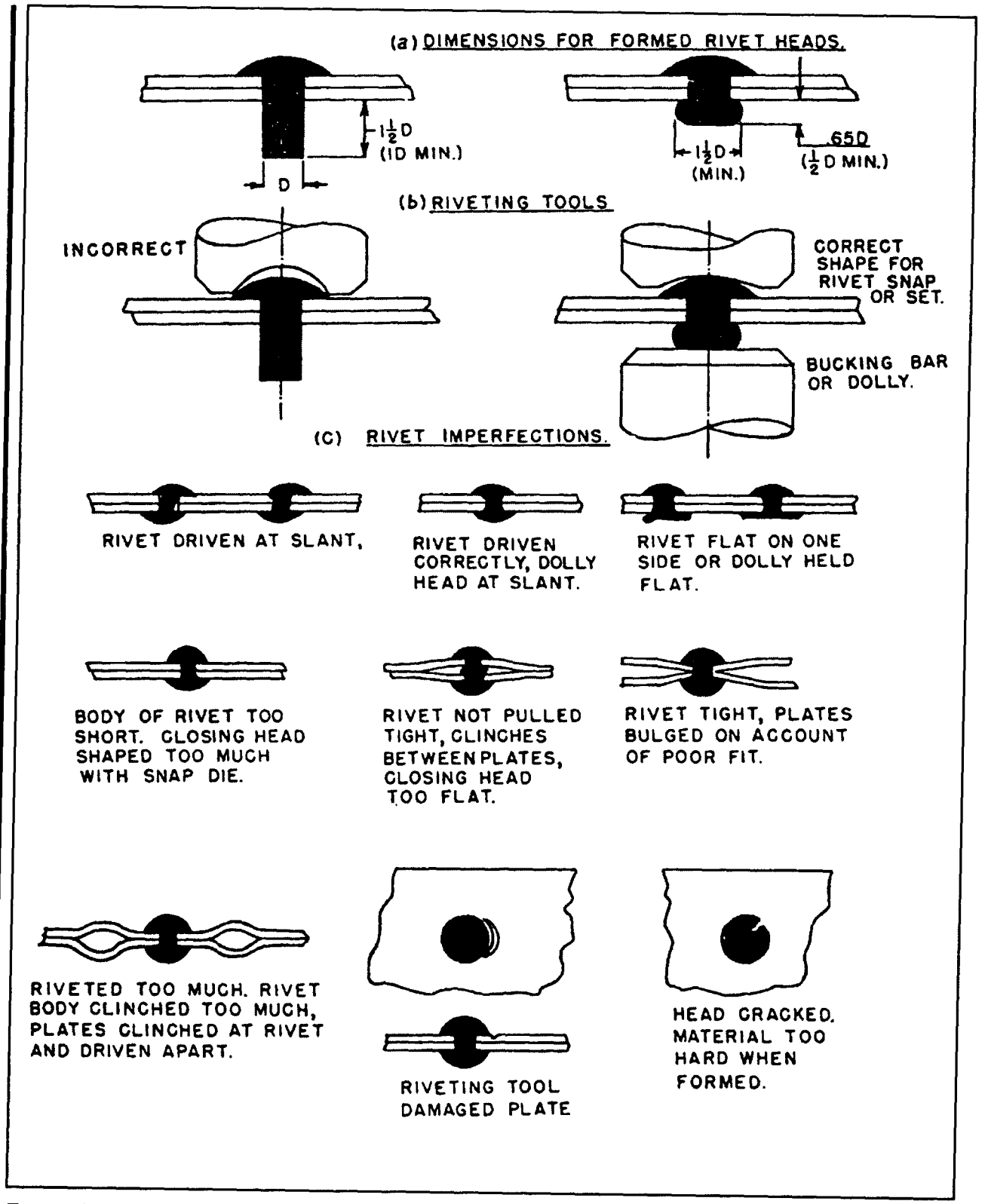

FIGURE 4-6. Riveting practice and rivet imperfections.

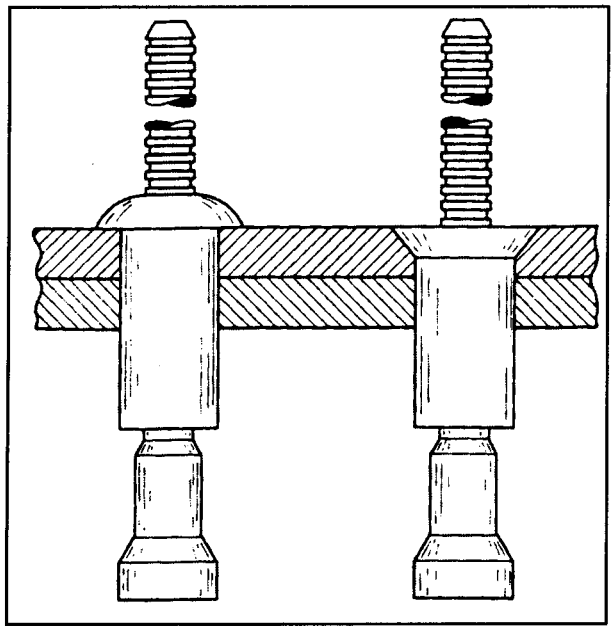

FIGURE 4-7. Self plugging friction-lock Cherry rivets.

(5) Bulbed Cherrylock Rivets. One of the earlier types of mechanical-lock rivets developed were Bulbed Cherrylock blind rivets. These blind rivets have as their main advantage the ability to replace a solid shank rivet size for size. (See figure 4-8.)

(a) A Bulbed Cherrylock consists of three parts; a rivet shell, a puller, and a lockring. The puller or stem has five features which are activated during installation; a header, shank expanding section, lockring indent, weak or stem fracture point, and a serrated pulling stem. Carried on the pulling stem, near the manufactured head, is the stem lockring. When the rivet is pulled the action of the moving stem clamps together the sheets of metal and swells the shank to fill the drilled hole. When the stem reaches its preset limit of travel, the upper stem breaks away (just above the lockring) as the lockring snaps into the recess on the locking stem. The rough end of the retained stem in the center on the manufactured head must never be filed smooth, because it will weaken the strength of the lockring and the center stem could fall out. (See figure 4-8.)

(b) The Bulbed Cherrylock rivets are available in two head styles: universal and 100° countersunk. Their lengths are measured in increments of 1/16 inch. It is important to select a rivet with a length related to the grip length of the metal being joined.

(c) The Bulbed Cherrylock rivet can be installed using a G35 cherry rivet hand puller or a pneumatic Bulbed Cherrylock pulling tool.

(6) The CherryMax (see figure 4-9) rivet uses one tool to install three standard rivet diameters and their oversize counterparts. This makes the use of CherryMax rivets very popular with many small general aviation repair shops. CherryMax rivets are available in four nominal diameters 1/8, 5/32, 3/16, and 1/4 inch and three oversized diameters. CherryMax rivets are manufactured with two head styles, universal and countersunk. The CherryMax rivets consists of five parts; bulbed blind header, hollow rivet shell, locking (foil) collar, driving anvil, and pulling stem. The blind bulbed header takes up the extended shank and forms the bucktail on a CherryMax rivet stem. Rivet sleeves are made from 5056 aluminum, monel, and INCO 600. The stems are made from alloy steel, CRES, and INCO X-750 stem. CherryMax rivets have an ultimate shear strength ranging from 50 KSI to 75 KSI.

(7) An Olympic-Lok (see figure 4-10) rivet is a light three-piece mechanically locked, spindle-type blind rivet. It carries its stem lock integral to the manufactured head. While installing, the lockring is pressed into a groove on the pulling stem just as the rivet completes drawing the metal together. After installation is completed, never file the stem of an Olympic-Lok rivet, because it will weaken the lockring attachment. The Olympic-Lok fastener is available in three head styles:

used for patching plywood may be used. The rivet pattern used, however, must follow standard practice to maintain satisfactory strength in the sheet.

g. Splicing of Sheets. The method of copying the seams at the edges of a sheet may not always be satisfactory. For example, when the sheet has cutouts, or doubler plates at an edge seam, or when other members transmit loads into the sheet, the splice must be designed as illustrated in the following examples.

(1) Material: Clad 2024 sheet, 0.032 inch thickness. Width of sheet (i.e., length at splice) = "W" = 10 inches.

(2) Determine rivet size and pattern for a single-lap joint similar to figure 4-5.

(a) Use rivet diameter of approximately three times the sheet thickness, 3 x 0.032 = 0.096-inch. Use 1/8-inch 2117-T4 (AD) rivets (5/32-inch 2117-T4 (AD) would be satisfactory).

(b) Use the number of rivets required per inch of width "W" from table 4-10. (Number per inch 4.9 x .75 = 3.7 or the total number of rivets required = 10 x 3.7 or 37 rivets.) See notes in table.

(c) Lay out rivet pattern with spacing not less than shown in figure 4-5. Referring to figure 4-5(A), it seems that a double row pattern with the minimum spacing will give a total of 40 rivets. However, as only 37 rivets are required, two rows of 19 rivets each equally spaced over the10 inches will result in a satisfactory splice.

h. Straightening of Stringers or Intermediate Frames. Members which are slightly bent may be straightened cold and examined with a magnifying glass for cracks or tears to the material. Reinforce the straightened part to its original shape, depending upon the condition of the material and the magnitude of any remaining kinks or buckles. If any strain cracks are apparent, make complete reinforcement in sound metal beyond the damaged portion.

i. Local Heating. Do not apply local heating to facilitate bending, swaging, flattening, or expanding operations of heat-treated aluminum alloy members, as it is difficult to control the temperatures closely enough to prevent possible damage to the metal, and it may impair its corrosion resistance.

j. Splicing of Stringers and Flanges. It is recommended that all splices be made in accordance with the manufacturer's recommendations. If the manufacturer's recommendations are not available, the typical splices for various shapes of sections are shown in figures 4-17 through 4-19. Design splices to carry both tension and compression, and use the splice shown in figure 4-18 as an example illustrating the following principles.

(1) To avoid eccentric loading and consequent buckling in compression, place splicing or reinforcing parts as symmetrically as possible about the centerline of the member, and attach to as many elements as necessary to prevent bending in any direction.

(2) To avoid reducing the strength in tension of the original bulb angle, the rivet holes at the ends of the splice are made small (no larger than the original skin attaching rivets), and the second row of holes (those through the bulbed leg) are staggered back from the ends. In general, arrange the rivets in the splice so that the design tensile load for the member and splice plate can be carried into the splice without failing the member at the outermost rivet holes.

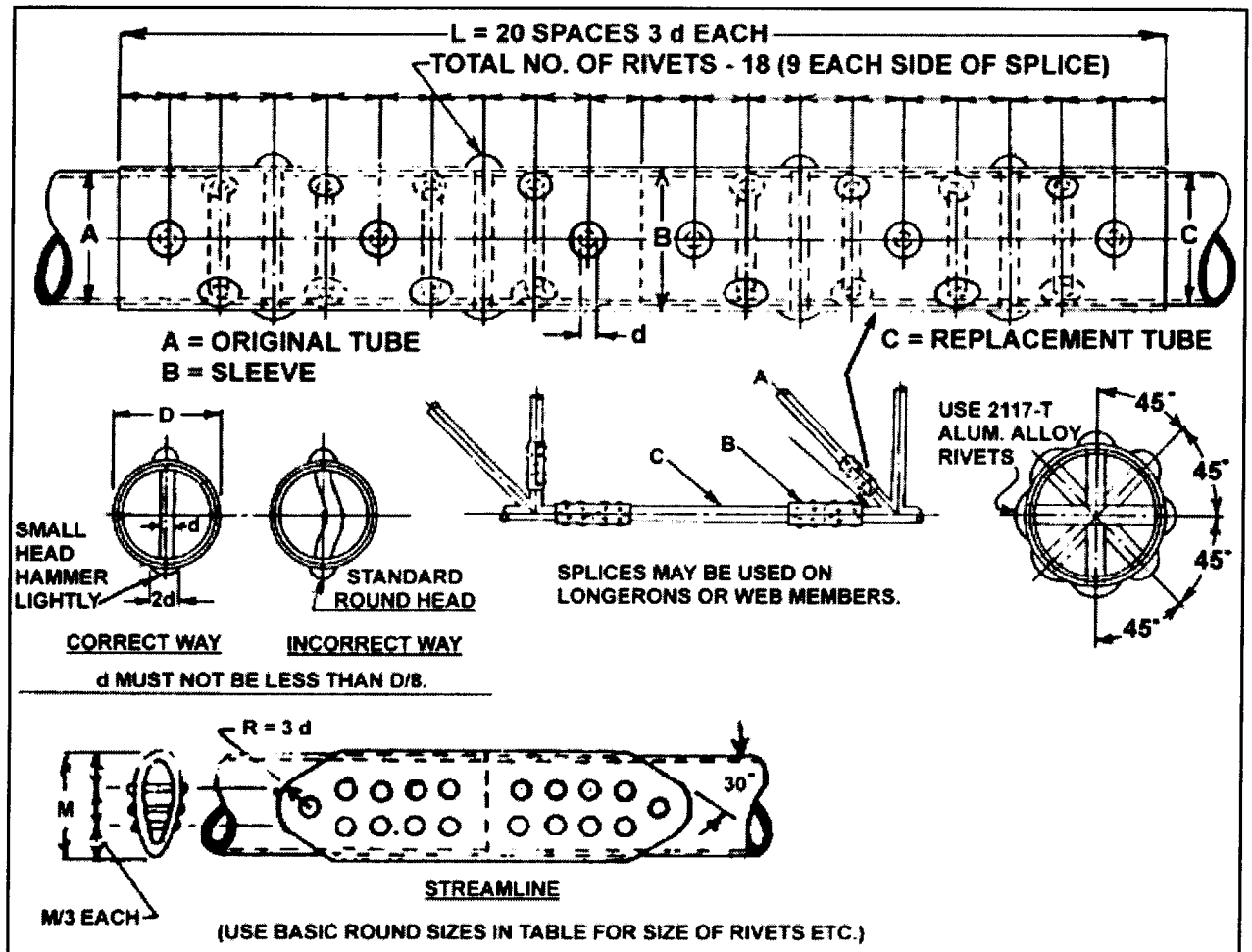

A, C *	3/4	7/8	1	1-1/8	1-1/4	1-/3/8	1-1/2	1-/5/8	1-3/4	1-7/8
	.065	.065	.065	.065	.058	.058	.058	.058	.058	.058
B	7/8	1	1-1/8	1-1/4	1-3/8	1-1/2	1-5/8	1-3/4	1-7/8	2
	ALL .058 THICK									
RIVET DIA.	5/32	5/32	3/16	3/16	3/16	3/16	1/4	1/4	1/4	1/4
L	9-3/8	9-3/8	11-1/4	11-1/4	11-1/4	11-1/4	15	15	15	15
* INCLUDES ALL THICKNESSES UP TO AND INCLUDING MAXIMUM SHOWN.										

NOTE. USE SAME MATERIAL AS ORIGINAL FOR SLEEVE AND REPLACEMENT TUBE.

FIGURE 4-12. Typical repair method for tubular members of aluminum alloy.

SECTION 5. WELDING AND BRAZING

4-74. GENERAL. This section covers weld repairs to aircraft and component parts only. Observe the following procedures when using such equipment as gas tungsten arc welding (GTAW), gas metal arc welding (GMAW), plasma arc welding, and oxyacetylene gas welding. When repairs of any of these flight-critical parts are required, it is extremely important to make the weld repairs equal to the original weld. Identifying the kind of metal to be welded, identifying the kind of welding process used in building the part originally, and determining the best way to make welded repairs are of utmost importance.

a. Welding is one of the three commonly used methods of joining metals without the use of fasteners. Welding is done by melting the edges of two pieces of metal to be joined and allowing the molten material to flow together so the two pieces will become one.

b. Brazing is similar to welding in that heat is used to join the material; but rather than melting, the metal is heated only enough to melt a brazing rod having a much lower melting point. When this brazing rod melts, it wets the surfaces to be joined, and when it cools and solidifies, it bonds the pieces together.

c. Soldering is similar to brazing except that brazing materials normally melt at temperatures above 425 °C (800 °F), while solders melt at temperatures considerably lower.

d. The next step in making airworthy weld repairs is to decide the best process to use, considering the available state-of-the-art welding equipment, and then deciding the correct weld-filler material to use. Before any weld repairs can be made, the metal parts to be welded must be cleaned properly, fitted and jigged properly, and all defective welds must be removed to prepare for an aircraft quality weld repair.

e. Finally, after the weld is completed, the weld must be inspected for defects. All these things are necessary in order to make an airworthy weld repair.

f. Aircraft welding Qualifications. Four groups of metals a person can be certified and qualified to use are:

(1) Group 1, 4130 Steel.
(2) Group 2, Stainless Steel.
(3) Group 3, Aluminum
(4) Group 4, Titanium.

g. For other group listing of metal the welder may qualify, refer to Mil-Std-1595A.

h. Most large business or agencies conduct their own certification tests, or they have an outside testing lab validate the certification tests.

4-75. EQUIPMENT SELECTION. Use the welding equipment manufacturer's information to determine if the equipment will satisfy the requirements for the type of welding operation being undertaken. Disregarding such detailed operating instructions may cause substandard welds. For example, when using GTAW equipment, a weld can be contaminated with tungsten if the proper size electrode is not used when welding with direct current reverse polarity. Another example, the depletion of the inert gas supply below the critical level causes a reduction in the gas flow and will increase the danger of atmospheric contamination.

(a) Electric welding equipment versatility requires careful selection of the type current and polarity to b used. Since the composition and thickness of metals are deciding

factors, the selection may vary with each specific application. Metals having refractory surface oxide films (i.e., magnesium alloys and aluminum and its alloys), are generally welded with alternating current (AC), while direct current (DC) is used for carbon, low alloy, noncorrodible, and heat-resisting steels. General recommendations covering current and polarity are shown in table 4-12.

(b) Oxyacetylene gas equipment is suitable for welding most metals. It is not, however, the best method to use on such materials as stainless steel, magnesium, and aluminum alloys; because of base metal oxidization, distortion, and loss of ductility.

NOTE: If oxyacetylene is used for welding stainless steel or aluminum, all flux must be removed, as it may cause corrosion.

4-76. ACCURATELY IDENTIFY THE TYPE OF MATERIAL TO BE REPAIRED. If positive identification of the material is not possible, contact the aircraft manufacturer or subject the item to a metallurgical laboratory analysis. Before any welding is attempted, carefully consider the weldability of the alloy, since all alloys are not readily weldable. The following steels are readily weldable; plain carbon (of the 1000 series), nickel steel (of the Society of Automotive Engineers (SAE) 2300 series), chrome-nickel alloys (of the SAE 3100 series), chrome-molybdenum steels (of the SAE 4100 series), and low nickel-chrome-molybdenum steel (of the SAE 8600 series).

4-77. PREPARATION FOR WELDING.

a. Hold elements to be welded in a welding jig or fixture which is sufficiently rigid to prevent misalignment due to expansion and contraction of the heated material and which positively and accurately positions the pieces to be welded.

b. Clean parts to be welded with a wire brush or other suitable method prior to welding. Do not use a brush of dissimilar metal, such as brass or bronze on steel. The small deposit left by a brass or bronze brush will materially weaken the weld, and may cause cracking or subsequent failure of the weld. If the members are metallized, the surface metal may be removed by careful sandblasting followed by a light buffing with emery cloth.

4-78. INSPECTION OF A COMPLETED WELD. Visually inspect the completed weld for the following:

(a) The weld has a smooth seam and uniform thickness. Visual inspection shall be made of the completed weld to check for undercut and/or smooth blending of the weld contour into the base metal.

(b) The weld is tapered smoothly into the base metal.

(c) No oxide has formed on the base metal more than 1/2 inch from the weld.

(d) There are no signs of blowholes, porosity, or projecting globules. Many military specifications, as well as American Society of Testing Materials (ASTM) codes, specify acceptable limits of porosity and other types of defects that are acceptable.

(e) The base metal shows no signs of pitting, burning, cracking, or distortion.

(f) The depth of penetration insures fusion of base metal and filler rod.

(g) The welding scale is removed. The welding scale can be removed using a wire brush or by sandblasting. Remove any

roll over, cold lab, or unfued weld metal. Check underside of welded joint for defects.

TABLE 4-12. Current and polarity selection for inert gas welding.

MATERIAL	ALTERNATING CURRENT With High-Frequency Stabilization	DIRECT CURRENT STRAIGHT Polarity
Magnesium up to 1/8 in. thick	1	N.R.
Magnesium above 3/16 in. thick	1	N.R.
Magnesium Castings	1	N.R.
Aluminum up to 3/32 in. thick	1	N.R.
Aluminum over 3/32 in. thick	1	N.R.
Aluminum Castings	1	N.R.
Stainless Steel		1
Low Carbon Steel, 0.015 to 0.030 in.		1
Low Carbon Steel, 0.030 to 0.125 in.	N.R.	1

1 Recommended N.R. Not Recommended

4-79. MICROFISSURES Cracks in parts and materials can vary from tiny microfissures, that are visible only with magnification, to those easily identified by unaided eyes. Microfissures are the worst type of defect for two reasons; they are often hard to detect, and they produce the worst form of notch effect/stress concentration. Once they form, they propagate with repeated applications of stress and lead to early failures. Every possible means should be used to detect the presence of cracks, and ensure their complete removal before welding operations proceed. (See figure 4-26.)

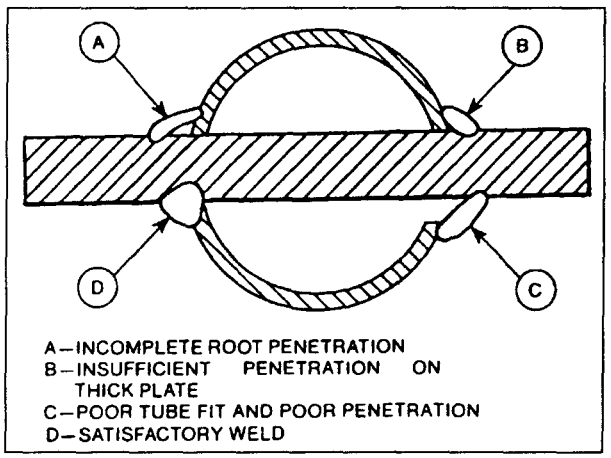

FIGURE 4-26. Common defects to avoid when fitting and welding aircraft certification cluster.

4-80. NONDESTRUCTIVE TESTING or evaluation is advisable in critical applications. Nondestructive testing methods such as; magnetic particle, liquid penetrant, radiography, ultrasonic, eddy current, and acoustic emission can be used; however, they require trained and qualified people to apply them.

4-81. PRACTICES TO GUARD AGAINST Do not file or grind welds in an effort to create a smooth appearance, as such treatment causes a loss of strength. Do not fill welds with solder, brazing metal, or any other filler. When it is necessary to weld a joint which was previously welded, remove all of the old weld material before rewelding. Avoid welding over a weld, because reheating may cause the material to lose its strength and become brittle. Never weld a joint which has been previously brazed.

4-82. TORCH SIZE (Oxyacetylene welding). When using oxyacetylene welding, the torch tip size depends upon the thickness of the material to be welded. Commonly used

sizes, proven satisfactory by experience, are shown in table 4-13.

TABLE 4-13. Torch tip sizes.

Thickness of steel (in inches)	Diameter of hole in tip	Drill size
0.015 to 0.031	0.026	71
0.031 to 0.065	.031	68
0.065 to 0.125	.037	63
0.125 to 0.188	.042	58
0.188 to 0.250	.055	54
0.250 to 0.375	.067	51

4-83. WELDING RODS AND ELECTRODES Use welding rods and electrodes that are compatible with the materials to be welded. Welding rods and electrodes for various applications have special properties suitable for the application intended.

Lap welds are used in shear applications. The weld throat of the fillet weld is considered the plane 45 degrees to the surface plane of the sheet being welded and is equal to 0.707 times the thickness of the sheet stock. (See figure 4-27.)

$$P_{WS} = 0.707xtx1xFwsu$$

where: P_{WS} = *the allowable tensile strength of the joint.*

t = *the thickness of the sheet stock (the throat of the weld joint.*

l = *the length of the weld joint.*

$Fwsu$ = *the shear strength of the filled rod material.*

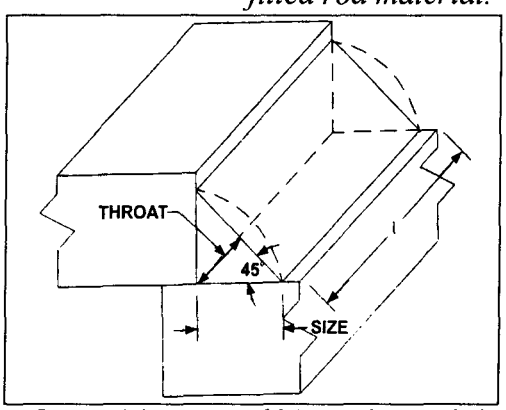

FIGURE 4-27. Lap Weld Strength Calculation

4-84. ROSETTE WELDS are generally employed to fuse an inner reinforcing tube (liner) with the outer member. Where a rosette weld is used, drill a hole, (in the outside tube only) of sufficient size to insure fusion of the inner tube. A hole diameter of approximately one-fourth the tube diameter of the outer tube serves adequately for this purpose. In cases of tight-fitting sleeves or inner liners, the rosettes may be omitted. Rosette weld edge distance is 1/2 the diameter of the tube, as measured from the edge of the rosette hole to the end of the inside and outside tube. Rosettes shall not be considered when determining the strength of a welded form. Drill an 1/8-inch hole in the lower tube in the center of the intended rosette weld so the heat does not burn away the outer tube. This small hole tends to bleed off the heat from the torch and keeps the size of the rosette small.

4-85. HEAT-TREATED MEMBERS Certain structural parts may be heat treated and, therefore, could require special handling. In general, the more responsive an alloy steel is to heat treatment, the less suitable it is for welding because of its tendency to become brittle and lose its ductility in the welded area. Weld the members which depend on heat treatment for their original physical properties by using a welding rod suitable for producing heat-treated values comparable to those of the original members. (See paragraph 4-74.) After welding, heat treat the affected members to the manufacturer's specifications.

4-86. TYPES OF WELDING.

a. Gas Welding. A fuel gas such as acetylene or hydrogen is mixed inside a welding torch with oxygen to produce a flame with a temperature of around 6,300 °F (3,482 °C).

This flame is used to melt the materials to be welded. A filler rod is melted into the puddle of molten metal to reinforce the weld. When highly-reactive metals such as aluminum are gas welded, they must be covered with flux to exclude oxygen from the molten metal and keep oxides from forming which would decrease the strength of the weld. (An illustration of a carburizing flame, a neutral flame, and an oxidizing flame is shown in figure 4-28.)

b. Shielded Metal Arc Welding (SMAW). This method is the most familiar and common type and is known in the trade as stick welding. A metal wire rod coated with a welding flux is clamped in an electrode holder connected to the power supply with a heavy electrical cable. The metal to be welded is also attached to the power supply. The electrical power is supplied to the work at a low voltage

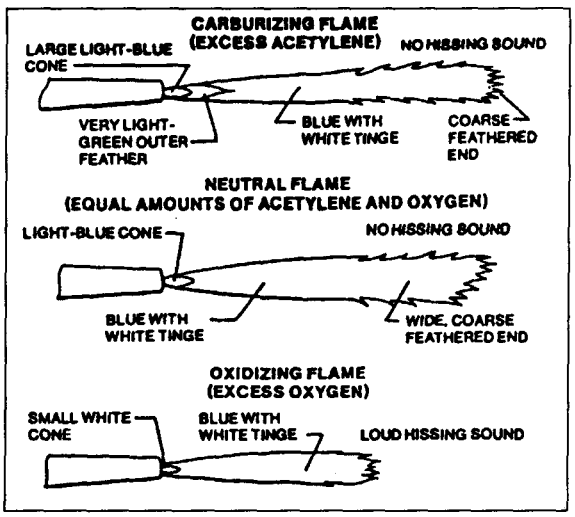

FIGURE 4-28. Basic gas-welding flames: Each has distinctive shape, color and sound. Neutral flame is the most used.

and high current and may be either AC or DC, depending upon the type of welding being done. An arc is struck between the rod and the work and produces heat in excess of 10,000 °F, which melts both the material and the rod. As the flux melts, it releases an inert gas which shields the molten puddle from oxygen in the air and prevents oxidation. The molten flux covers the weld and hardens to an airtight slag cover that protects the weld bead as it cools. This slag must be chipped off to examine the weld.

c. Gas Metal Arc Welding (GMAW). This method of welding was formerly called Metal Inert Gas (MIG) welding and is an improvement over stick welding because an uncoated wire electrode is fed into the torch and an inert gas such as argon, helium, or carbon dioxide flows out around the wire to protect the puddle from oxygen. The power supply connects between the torch and the work, and the arc produces the intense heat needed to melt the work and the electrode. Low-voltage high-current DC is used almost exclusively with GMAW welding. GMAW is used more for large-volume production work than for aircraft repair.

d. Gas Tungsten Arc Welding (GTAW). This is the form of electric arc welding that fills most of the needs in aircraft maintenance. It is more commonly known as Tungsten Inert Gas (TIG) welding and by the trade names of Heliarc or Heliweld. These trade names were derived from the fact that the inert gas originally used was helium.

(1) Rather than using a consumable electrode such as is used in both of the other two methods we have discussed, the electrode in TIG welding is a tungsten rod. (In earlier procedures using this form of welding, a carbon electrode was used, but it has been replaced almost exclusively with tungsten.)

(2) The 250+ amp arc between the electrode and the work melts the metal at 5,432 °F, and a filler rod is manually fed into the molten puddle. A stream of inert gas such as argon or helium flows out of the torch and envelopes the arc, thereby preventing the formation of oxides in the puddle.

(3) The versatility of TIG welding is increased by the power supply that is used. Direct current of either polarity or alternating current may be used. (See figures 4-29 and 4-30.)

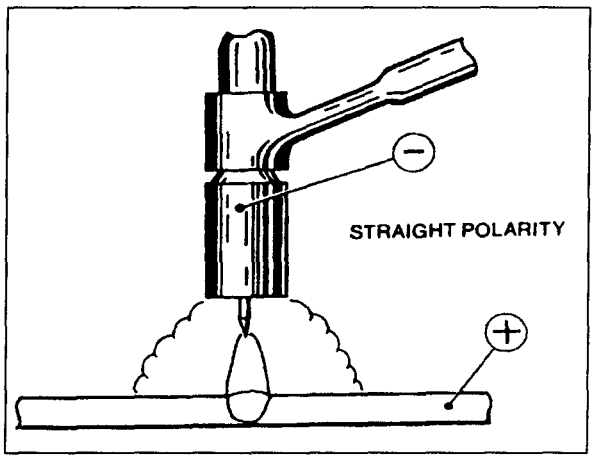

FIGURE 4-29. Set TIG welder to DC current, straight polarity for welding mild steel, stainless steel and titanium

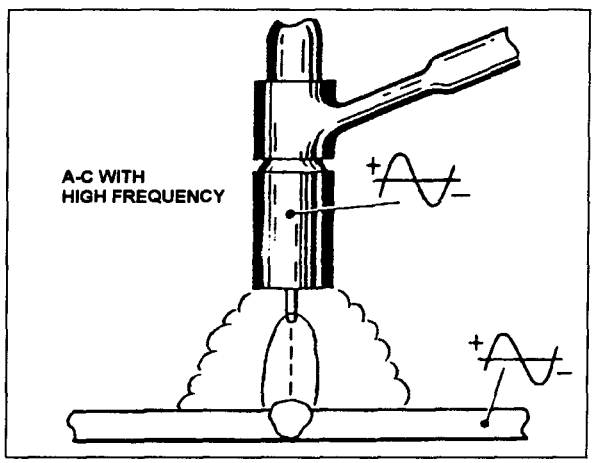

FIGURE 4-30. Set TIG to AC current for welding aluminum and magnesium.

4-87. ELECTRIC-RESISTANCE WELDING. Many thin sheet metal parts for aircraft, especially stainless steel parts, are joined by one of the forms of electric resistance welding, either spot welding or seam welding.

a. Spot Welding. Two copper electrodes are held in the jaws of the spot welding machine, and the material to be welded is clamped between them. Pressure is applied to hold the electrodes tightly together, and electrical current flows through the electrodes and the material. The resistance of the material being welded is so much higher than that of the copper electrodes that enough heat is generated to melt the metal. The pressure on the electrodes forces the molten spots in the two pieces of metal to unite, and this pressure is held after the current stops flowing long enough for the metal to solidify. Refer to MIL HDBK-5 for joint construction and strength data. The amount of current, pressure, and dwell time are all carefully controlled and matched to the type of material and the thickness to produce the correct spot welds. (See figure 4-31.)

b. Seam Welding. Rather than having to release the electrodes and move the material to form a series of overlapping spot welds, a seam-welding machine is used to manufacture fuel tanks and other components where a continuous weld is needed. Two copper wheels

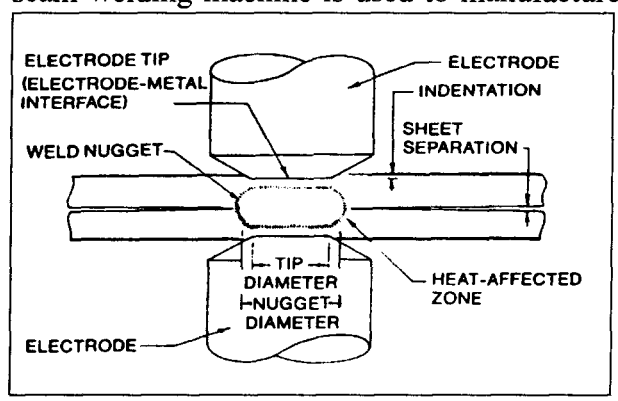

FIGURE 4-31. In spot welding, heat is produced by electrical resistance between copper electrodes. Pressure is simultaneously applied to electrode tips to force metal together to complete fusing process. Spot-weld-nugget size is directly related to tip size.

replace the bar-shaped electrodes. The metal to be welded is moved between them, and electric pulses create spots of molten metal that overlap to form the continuous seam.

4-88. BRAZING. Brazing refers to a group of metal-joining processes in which the bonding material is a nonferrous metal or alloy with a melting point higher than 425 C (800 F), but lower than that of the metals being joined. Brazing includes silver brazing (erroneously called silver soldering or hard soldering), copper brazing, and aluminum brazing.

NOTE: Never weld over a previously brazed joint.

a. Brazing requires less heat than welding and can be used to join metals that are damaged by high heat. However, because the strength of brazed joints is not as great as welded joints, brazing is not used for structural repairs on aircraft. In deciding whether brazing of a joint is justified, it should be remembered that a metal, which will be subjected to a sustained high temperature in use, should not be brazed.

b. A brazing flux is necessary to obtain a good union between the clean base metal and the filler metal. There are a number of readily available manufactured fluxes conforming to AWS and AMT specifications.

c. The base metal should be preheated slowly with a mild flame. When it reaches a dull-red heat (in the case of steel), the rod should be heated to a dark (or purple) color and dipped into the flux. Since enough flux adheres to the rod, it is not necessary to spread it over the surface of the metal.

d. A neutral flame is used in most brazing applications. However, a slightly oxidizing flame should be used when copper-zinc, copper-zinc-silicon, or copper-zinc-nickel-silicon filler alloys are used. When brazing aluminum and its alloys, a neutral flame is preferred, but if difficulties are encountered, a slightly reduced flame is preferred to an oxidizing flame.

e. The filler rod can now be brought near the tip of the torch, causing the molten bronze to flow over a small area of the seam. The base metal must be at the flowing temperature of the filler metal before it will flow into the joint. The brazing metal melts when applied to the steel and runs into the joint by capillary attraction. In braze welding, the rod should continue to be added, as the brazing progresses, with a rhythmic dipping action; so that the bead will be built to a uniform width and height. The job should be completed rapidly and with as few passes of the rod and torch as possible.

f. When the job is finished, the metal should be allowed to cool slowly. After cooling, remove the flux from the parts by immersing them for 30 minutes in a lye solution.

(1) Copper brazing of steel is normally done in a special furnace having a controlled atmosphere, and at a temperature so high that field repairs are seldom feasible. If copper brazing is attempted without a controlled atmosphere, the copper will probably not completely wet and fill the joint. Therefore, copper brazing in any conditions other than appropriately controlled conditions is not recommended.

(a) The allowable shear strength for copper brazing of steel alloys should be 15 thousand pounds per square inch (kpsi), for all conditions of heat treatment.

(b) The effect of the brazing process on the strength of the parent or base metal of steel alloys should be considered in the structural design. Where copper furnace brazing is employed, the calculated allowable strength of

the base metal, which is subjected to the temperatures of the brazing process, should be in accordance with table 4-14.

TABLE 4-14. Calculated allowable strength of base metal.

Material	Allowable Strength
Heat-treated material (including normalized) used in "as-brazed" condition	Mechanical properties of normalized material
Heat-treated material (including normalized) reheat-treated during or after brazing	Mechanical properties corresponding to heat treatment performed

(2) Alloys commonly referred to as silver solders melt above 425 °C (800 °F), and when using them the process should be called silver brazing.

(a) The principal use of silver brazing in aircraft work is in the fabrication of high-pressure oxygen lines and other parts which must withstand vibration and high temperatures. Silver brazing is used extensively to join copper (and its alloys), nickel, silver, various combinations of these metals, and thin steel parts. Silver brazing produces joints of higher strength than those produced by other brazing processes.

(b) It is necessary to use flux in all silver-brazing operations, because of the necessity for having the base metal chemically clean, (without the slightest film of oxide to prevent the silver-brazing alloy from coming into intimate contact with the base metal).

(c) The joint must be physically and chemically clean, which means it must be free of all dirt, grease, oil, and paint. After removing the dirt, grease, and paint, any oxide should be removed by grinding or filing the piece until bright metal can be seen. During the soldering operation, the flux continues the process of keeping oxide away from the metal and aids the flow of solder.

(d) In figure 4-32, three types of joints for silver brazing are shown; flanged butt, lap, and edge joints. If a lap joint is used, the amount of lap should be determined according to the strength needed in the joint. For strength equal to that of the base metal in the heated zone, the amount of lap should be four to six times the metal thickness.

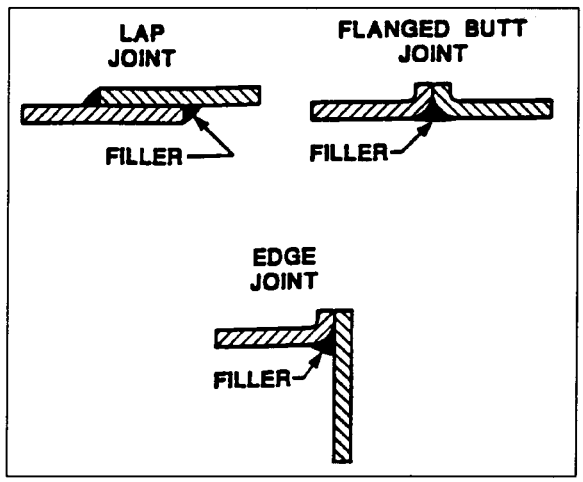

FIGURE 4-32. Silver brazing joints.

(e) The oxyacetylene flame for silver brazing should be neutral, but may have a slight excess of acetylene. It must be soft, not harsh. During both preheating and application of the solder, the tip of the inner cone of the flame should be held about 1/2 inch from the work. The flame should be kept moving so that the metal will not become overheated.

(f) When both parts of the base metal are at the right temperature (indicated by the flow of flux), brazing alloy can be applied to the surface of the under or inner part at the edge of the seam. It is necessary to simultaneously direct the flame over the seam, and keep moving it so that the base metal remains at an even temperature.

(3) The torch can be shut off simply by closing the acetylene off first and allowing the gas remaining in the torch tip to burn out. Then turn off the oxygen valve. If the torch is not to be used again for a long period, the pressure should be turned off at the cylinder. The hose lines should then be relieved of pressure by opening the torch needle valves and the working pressure regulator, one at a time, allowing the gas to escape. Again, it is a good practice to relieve the oxygen pressure and then the acetylene pressure. The hose should then be coiled or hung carefully to prevent damage or kinking.

(4) Soft soldering is used chiefly for copper, brass, and coated iron in combination with mechanical seams; that is, seams that are riveted, bolted, or folded. It is also used where a leak-proof joint is desired, and sometimes for fitting joints to promote rigidity and prevent corrosion. Soft soldering is generally performed only in very minor repair jobs. This process is used to join electrical connections because it forms a strong union with low electrical resistance.

(a) Soft solder gradually yields under a steadily applied load and should not be used unless the transmitted loads are very low. It should never be used as a means of joining structural members.

(b) A soldering iron is the tool used in soldering. Its purpose is to act as a source of heat for the soldering operation. The bit, or working face, is made from copper since this metal will readily absorb heat and transmit it to the work. Figure 4-33 shows a wedge-shaped bit.

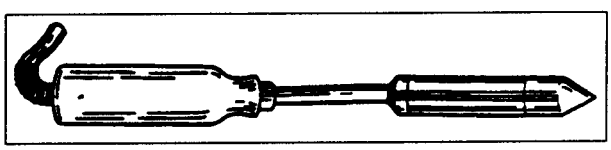

FIGURE 4-33. Electric soldering iron.

(c) To tin the soldering iron, it is first heated to a bright red, and then the point is cleaned (by filing) until it is smooth and bright. No dirt or pits should remain on its surface. After the soldering iron has been mechanically cleaned, it should be reheated sufficiently to melt solder and chemically cleaned by rubbing it firmly on a block of sal ammoniac (ammonium chloride). Rosin flux paste may also be used. Solder is then applied to the point and wiped with a clean cloth.

(d) A properly tinned copper iron has a thin unbroken film of solder over the entire surface of its point.

(e) Soft solders are chiefly alloys of tin and lead. The percentages of tin and lead vary considerably in various solder, with a corresponding change in their melting points, ranging from 145-311 °C (293-592 °F). Half-and-half (50/50) solder is a general purpose solder and is most frequently used. It contains equal proportions of tin and lead, and it melts at approximately 182 °C (360 °F).

(f) The application of the melted solder requires somewhat more care than is apparent. The parts to be soldered should be locked together or held mechanically or manually while tacking. To tack the seam, the hot copper iron is touched to a bar of solder, then the drops of solder adhering to the copper iron are used to tack the seam at a number of points. The film of solder between the surfaces of a joint must be kept thin to make the strongest joint.

(g) A hot, well-tinned soldering copper iron should be held so that its point lies flat on the metal (at the seam), while the back of the copper iron extends over the seam proper at a 45-degree angle, and a bar of solder is touched to the point. As the solder

melts, the copper iron is drawn slowly along the seam. As much solder as necessary is added without raising the soldering copper iron from the job. The melted solder should run between the surfaces of the two sheets and cover the full width of the seam. Work should progress along the seam only as fast as the solder will flow into the joint.

4-89. AIRCRAFT PARTS NOT TO BE WELDED.

a. Brace Wires and Cables. Do not weld aircraft parts whose proper function depends upon strength properties developed by cold-working. Among parts in this classification are streamlined wire and cables.

b. Brazed and Soldered Parts. Do not weld brazed or soldered parts as the brazing mixture or solder will penetrate and weaken the hot steel.

c. Alloy Steel Parts. Do not weld alloy steel parts such as aircraft bolts, turnbuckle ends, etc., which have been heat treated to improve their mechanical properties.

d. Nos. 2024 and 7075 Aluminum. Do not weld these two aluminum alloys (that are often used in aircraft construction) because the heat from the welding process will cause severe cracking. The 2024 aluminum is most often used in wing skins, fuselage skins, and in most structured airframe parts. The 7075 aluminum is most often used in machined fittings such as wing-spar attachments, landing-gear attachments, and other structural parts.

4-90. WELDING ROD SELECTION.

Most aircraft repair shops that are prepared to make weld repairs should have the basic selection of welding rods available. The best rods to stock, the metals they weld, and the AWS specification number are shown in table 4-15.

4-91. REPAIR OF TUBULAR MEMBERS.

a. Inspection. Prior to repairing tubular members, carefully examine the structure surrounding any visible damage to insure that no secondary damage remains undetected. Secondary damage may be produced in some structure, remote from the location of the primary damage, by the transmission of the damaging load along the tube. Damage of this nature usually occurs where the most abrupt change in direction of load travel is experienced. If this damage remains undetected, subsequent normal loads may cause failure of the part.

b. Location and Alignment of Welds. Unless otherwise noted, welded steel tubing may be spliced or repaired at any location along the length of the tube. To avoid distortion, pay particular attention to the proper fit and alignment.

c. Members Dented at a Cluster. Repair dents at a steel-tube cluster joint by welding a specially formed steel patch plate over the dented area and surrounding tubes. (See figure 4-34.) To prepare the patch plate, cut a section of steel sheet of the same material and thickness as the heaviest tube damaged. Trim the reinforcement plate so that the fingers extend over the tubes a minimum of 1.5 times the respective tube diameter. (See figure 4-34.) Remove all the existing finish on the damaged cluster-joint area to be covered by the reinforcement plate. The reinforcement plate may be formed before any welding is attempted, or it may be cut and tack-welded to one or more of the tubes in the cluster joint, then heated and formed around the joint to produce a smooth contour. Apply sufficient heat to the plate while forming so that there is generally a

gap of no more than 1/16 inch from the contour of the joint to the plate. In this operation avoid unnecessary heating, and exercise care to prevent damage at the point of the angle formed by any two adjacent fingers of the plate. After the plate is formed and tack welded to the cluster joint, weld all the plate edges to the cluster joint.

TABLE 4-15. Chart showing Welding Filler Rod selection.

Welding Rod #	AMS Spec.	AWS Spec.	Welds these Metals
4130	AMS 6457	AWS A5.18	Mild Steel, 4130 steel
4140	AMS 6452	AWS A5.28	4140 Steel
4043	AMS 4190	AWS A5.10	Most weldable Aluminum
308L	AMS 5692	AWS A5.9	304 Stainless steel
316L	AMS 5692	AWS A5.9	316 Stainless steel
AZ61A	AMS 4350	AWS A5.19	AZ61A Magnesium
ERTi-5	AMS 4954	AWS A5-16	Titanium

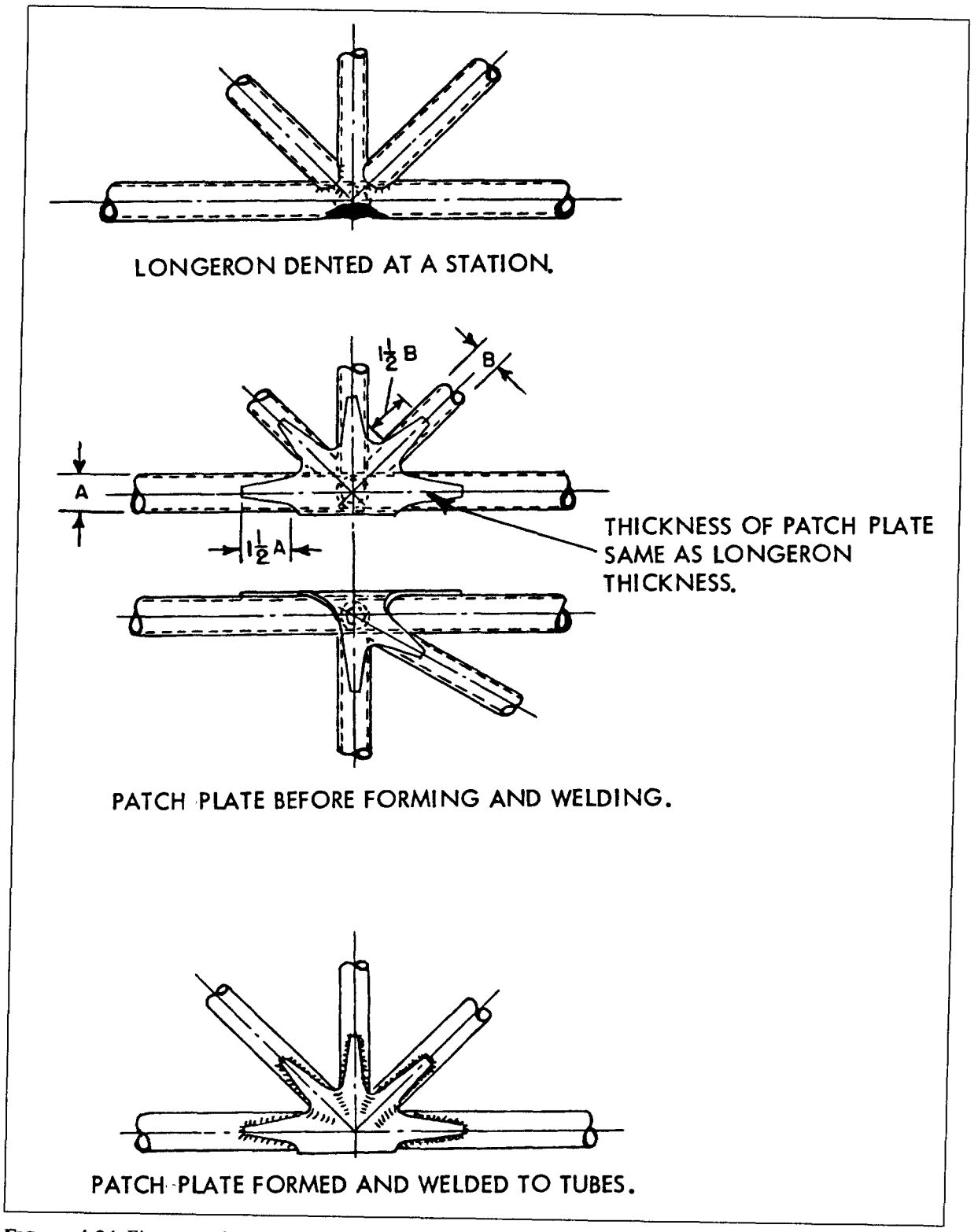

FIGURE 4-34. Finger patch repairs for members dented at a cluster.

d. Members Dented in a Bay. Repair dented, bent, cracked, or otherwise damaged tubular members by using a split-sleeve reinforcement. Carefully straighten the damaged member, and in the case of cracks, drill No. 40 (0.098) inch stop holes at the ends of the crack.

4-92. REPAIR BY WELDED SLEEVE. This repair is outlined in figure 4-35. Select a length of steel tube sleeve having an inside diameter approximately equal to the outside diameter of the damaged tube and of the same material, and at least the same wall thickness. Diagonally cut the sleeve reinforcement at a 30-degree angle on both ends so that the minimum distance of the sleeve from the edge of the crack or dent is not less than 1-1/2 times the diameter of the damaged tube. Cut through the entire length of the reinforcement sleeve, and separate the half-sections of the sleeve. Clamp the two sleeve sections to the proper positions on the affected areas of the original tube. Weld the reinforcement sleeve along the length of the two sides, and weld both ends of the sleeve to the damaged tube. (See figure 4-35.) The filling of dents or cracks with welding rod in lieu of reinforcing the member is not acceptable.

4-93. REPAIR BY BOLTED SLEEVE. Do not use bolted-sleeve repairs on welded steel-tube structure unless specifically authorized by the manufacturer or the FAA. The tube area removed by the bolt holes, in this type of repair, may prove critical.

4-94. WELDED-PATCH REPAIR. Dents or holes in tubing may be repaired by using a patch of the same material, one gauge thicker. (See figure 4-36.)

a. Dented Tubing.

(1) Dents are not deeper than 1/10 of tube diameter, do not involve more than 1/4 of the tube circumference, and are not longer than tube diameter.

(2) Dents are free from cracks, abrasions, and sharp corners.

(3) The dented tubing can be substantially reformed, without cracking, before application of the patch.

b. Punctured Tubing. Holes are not longer than tube diameter and involve not more than 1/4 of tube circumference.

4-95. SPLICING TUBING BY INNER-SLEEVE METHOD. If the damage to a structural tube is such that a partial replacement of the tube is necessary, the inner-sleeve splice is recommended; especially where a smooth tube surface is desired. (See figure 4-37.)

a. Make a diagonal cut when removing the damaged portion of the tube, and remove the burr from the edges of the cut by filing or similar means. Diagonally cut a replacement steel tube of the same material and diameter, and at least the same wall thickness, to match the length of the removed portion of the damaged tube. At each end of the replacement tube allow a 1/8-inch gap from the diagonal cuts to the stubs of the original tube. Select a length of steel tubing of the same material, and at least the same wall thickness, and of an outside diameter equal to the inside diameter of the damaged tube. Fit this inner-sleeve tube material snugly within the original tube, with a maximum diameter difference of 1/16 inch. From this inner-sleeve tube material cut two sections of tubing, each of such a length that the ends of the inner sleeve will be a minimum distance of 1-1/2-tube diameters from the nearest end of the diagonal cut.

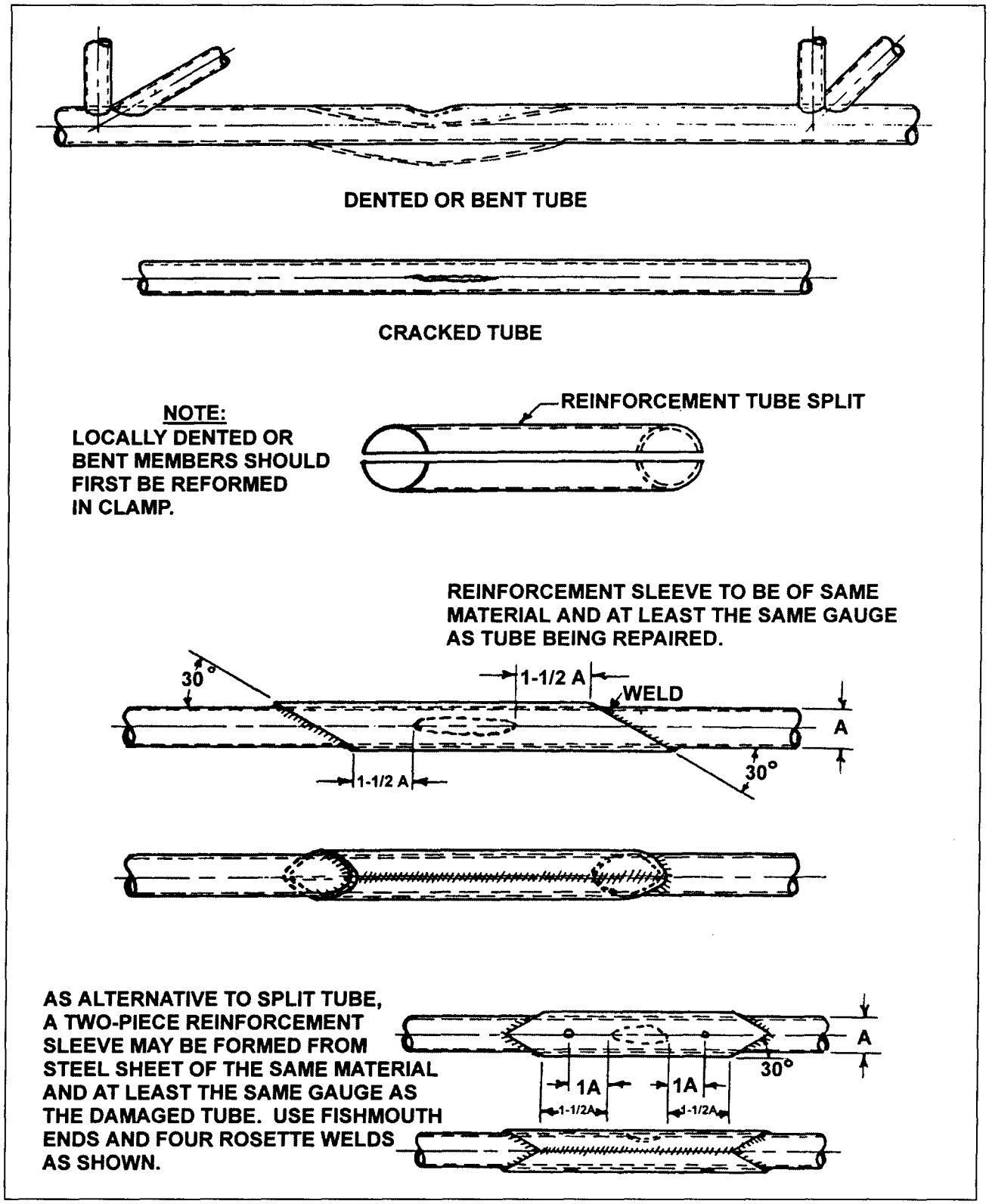

FIGURE 4-35. Members dented in a bay (repairs by welded sleeve).

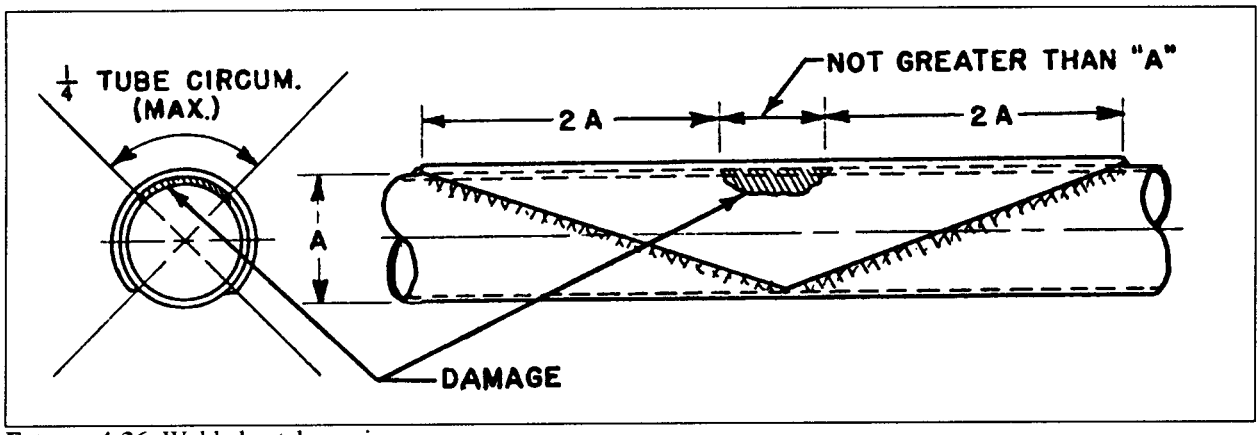

FIGURE 4-36. Welded patch repair.

b. If the inner sleeve fits very tightly in the replacement tube, chill the sleeve with dry ice or cold water. If this is insufficient, polish down the diameter of the sleeve with emery cloth. Tack the outer and inner replacement tubes using rosette welds. Weld the inner sleeve to the tube stubs through the 1/8-inch gap, forming a weld bead over the gap.

4-96. SPLICING TUBING BY OUTER-SLEEVE METHOD. If partial replacement of a tube is necessary, make the outer-sleeve splice using a replacement tube of the same diameter. Since the outer-sleeve splice requires the greatest amount of welding, it should be used only when the other splicing methods are not suitable. Information on the replacement by use of the outer-sleeve method is given in figure 4-38 and figure 4-39.

a. Remove the damaged section of a tube utilizing a 90-degree cut. Cut a replacement steel tube of the same material, diameter, and at least the same wall thickness to match the length of the removed portion of the damaged tube. This replacement tube must bear against the stubs of the original tube with a total tolerance not to exceed 1/32 inch. The outer-sleeve tube material selected must be of the same material and at least the same wall thickness as the original tube. The clearance between inside diameter of the sleeve and the outside diameter of the original tube may not exceed 1/16 inch.

b. From this outer-sleeve tube material, cut diagonally (or fishmouth) two sections of tubing, each of such length that the nearest end of the outer sleeve is a minimum distance of 1-1/2-tube diameters from the end of the cut on the original tube. Use a fishmouth sleeve wherever possible. Deburr the edges of the sleeves, replacement tube, and the original tube stubs.

c. Slip the two sleeves over the replacement tube, align the replacement tube with the original tube stubs, and slip the sleeves over the center of each joint. Adjust the sleeves to suit the area and provide maximum reinforcement.

d. Tack weld the two sleeves to the replacement tube in two places before welding. Apply a uniform weld around both ends of one of the reinforcement sleeves and allow the weld to cool; then, weld around both ends of the remaining reinforcement tube. Allow one sleeve weld to cool before welding the remaining tube to prevent undue warping.

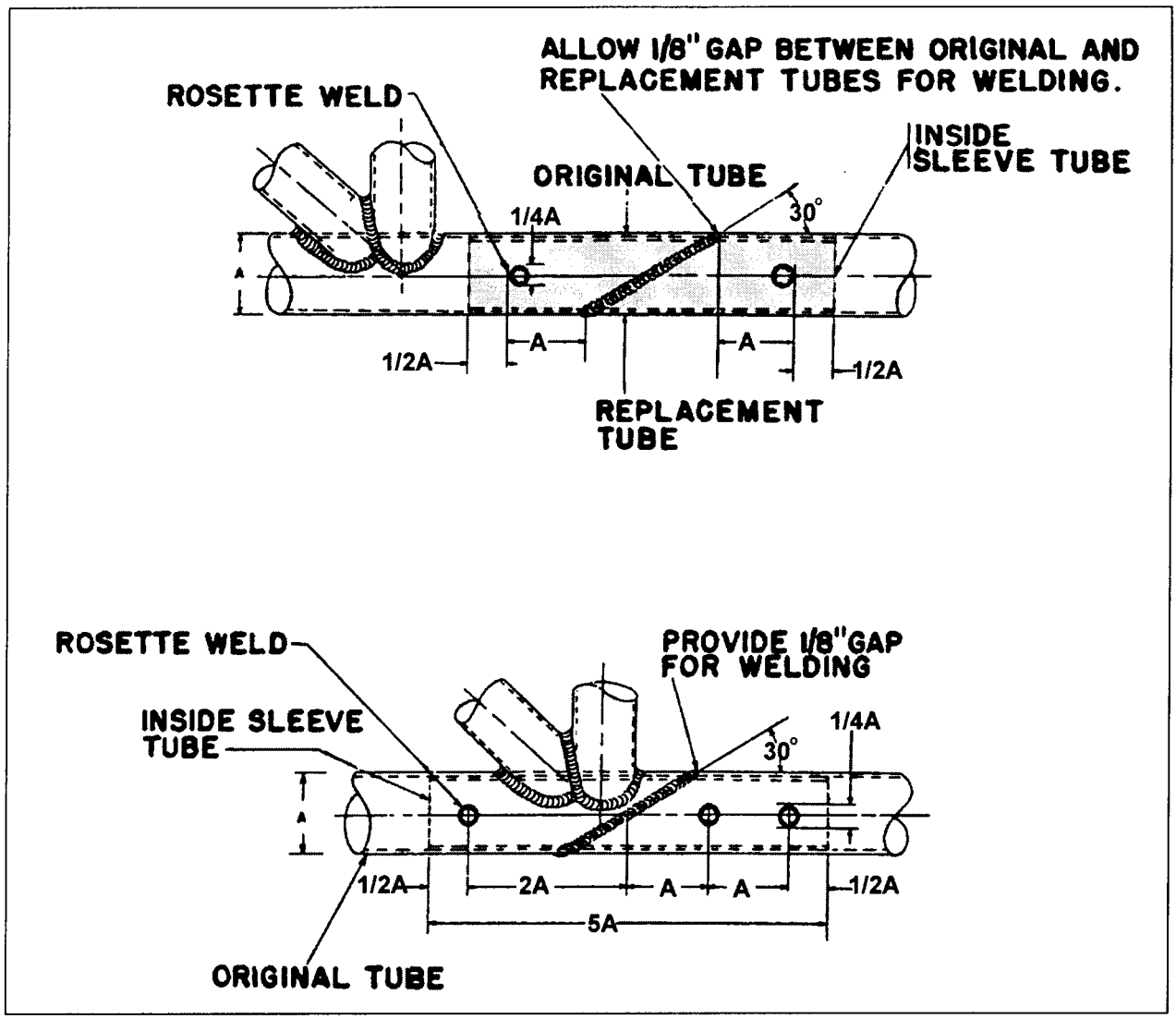

FIGURE 4-37. Splicing by inner-sleeve method.

4-97. SPLICING USING LARGER DIAMETER REPLACEMENT TUBES. The method of splicing structural tubes, as shown in figure 4-40, requires the least amount of cutting and welding. However, this splicing method cannot be used where the damaged tube is cut too near the adjacent cluster joints, or where bracket-mounting provisions make it necessary to maintain the same replacement tube diameter as the original. As an aid to installing the replacement tube, squarely cut the original damaged tube leaving a minimum short stub equal to 2-1/2-tube diameters on one end and a minimum long stub equal to 4-1/2-tube diameters on the other end. Select a length of steel tube of the same material and at least the same wall thickness, having an inside diameter approximately equal to the outside diameter of the damaged tube. Fit this replacement tube material snugly around the original tube with a maximum diameter difference of 1/16 inch. From this replacement tube material, cut a section of tubing diagonally (or fishmouth) of such a length that each end of the tube is a minimum distance of 1-1/2-tube diameters from the end of the cut on the original tube. Use a fishmouth cut replacement tube wherever possible. Deburr the edges of the replacement tube and original tube stubs.

If a fishmouth cut is used, file out the sharp radius of the cut with a small round file.

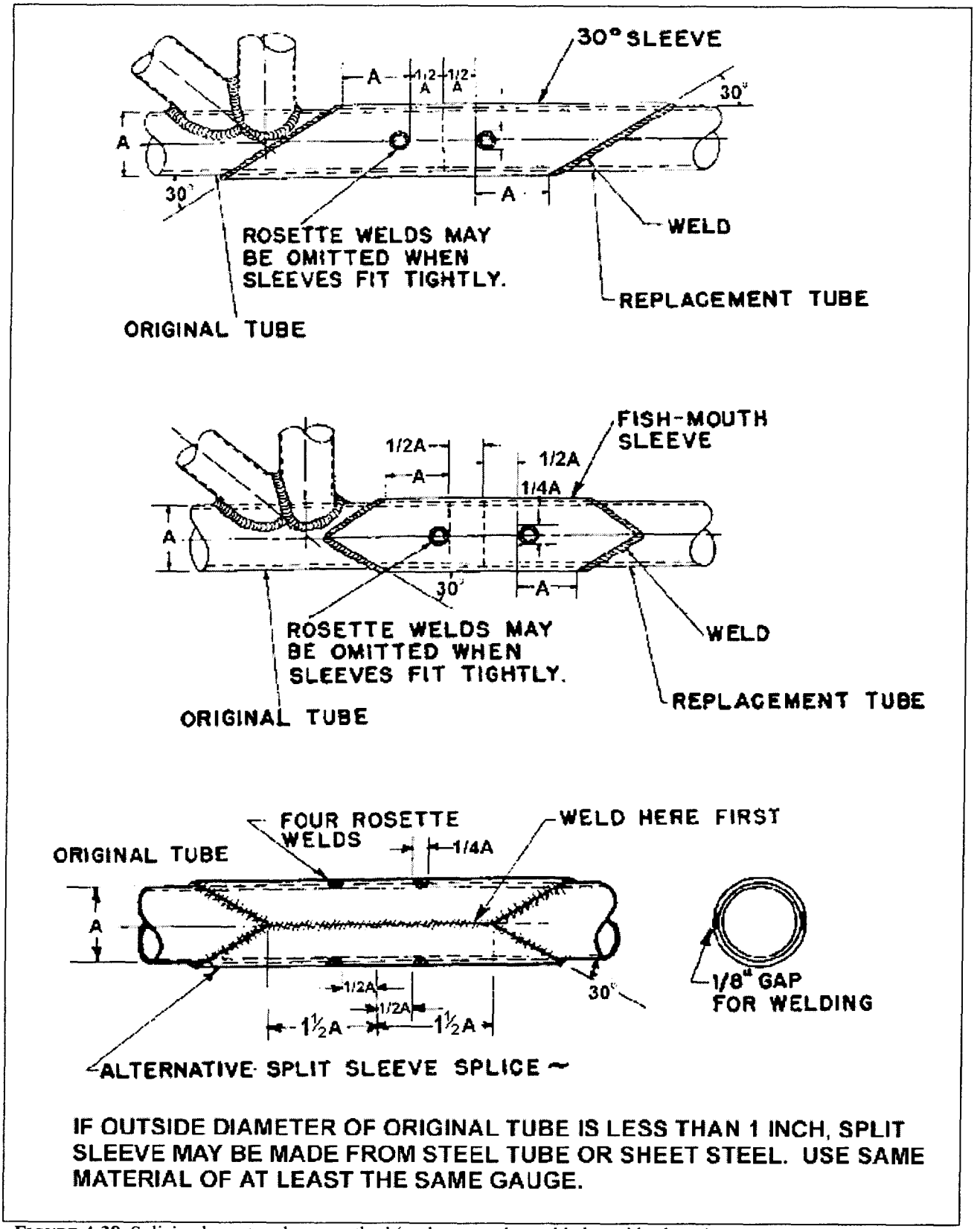

FIGURE 4-38. Splicing by outer-sleeve method (replacement by welded outside sleeve).

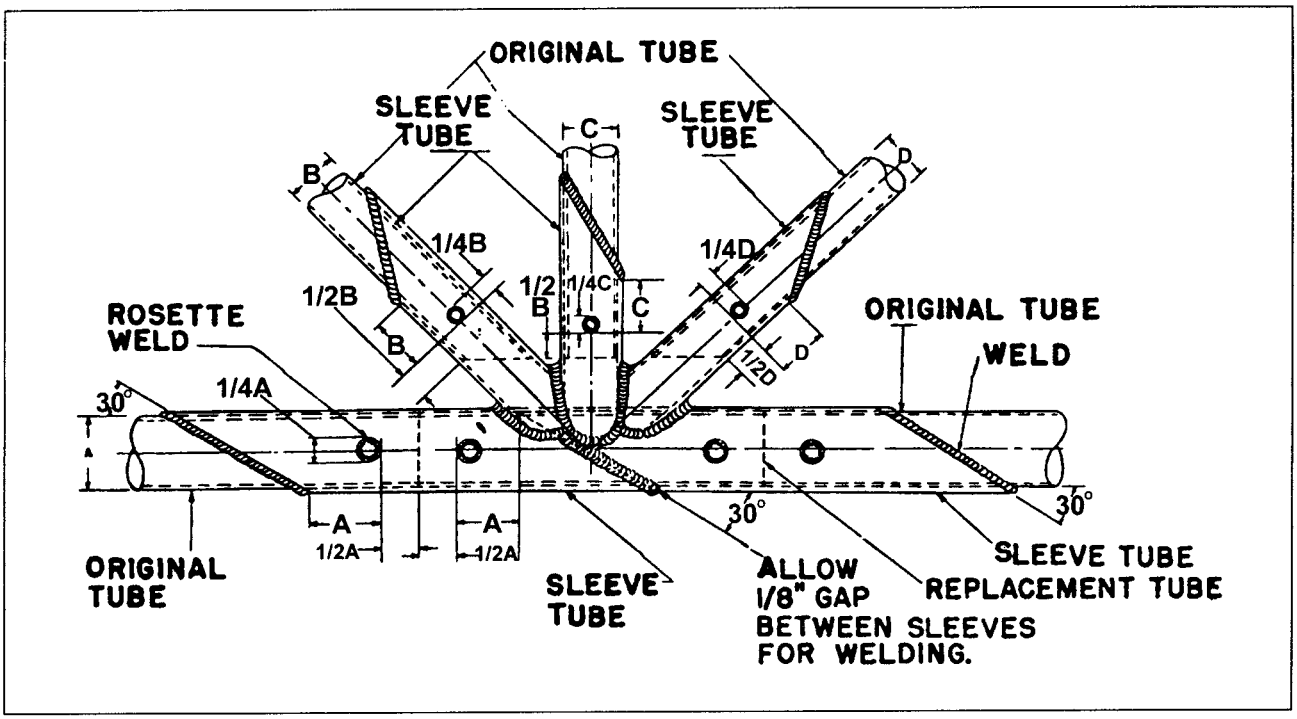

FIGURE 4-39. Tube replacement at a station by welded outer sleeves.

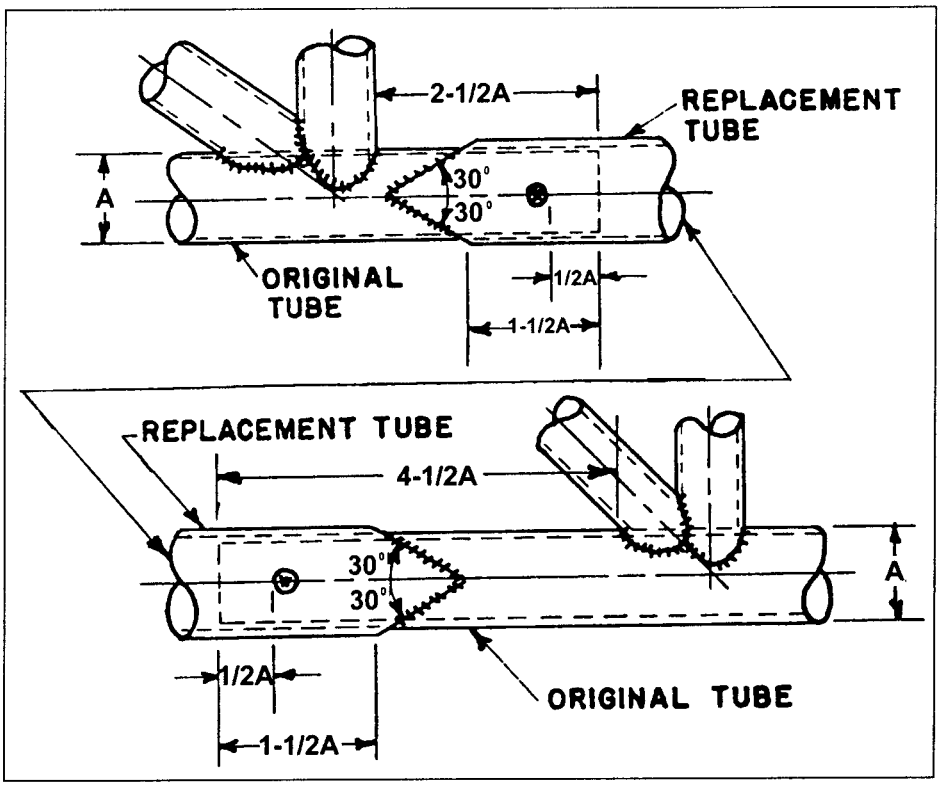

FIGURE 4-40. Splicing using larger diameter replacement tube.

Spring the long stub of the original tube from the normal position, slip the replacement tube over the long stub, and then back over the short stub. Center the replacement tube between the stubs of the original tube. Tack weld one end of the replacement tube in several places, then weld completely around the end. In order to prevent distortion, allow the weld to cool completely, then weld the remaining end of the replacement tube to the original tube.

4-98. REPAIRS AT BUILT-IN FUSELAGE FITTINGS. Make splices in accordance with the methods described in paragraphs 4-86 through 4-92. Repair built-in fuselage fittings in the manner shown in figure 4-41. The following paragraphs outline the different methods as shown in figure 4-41.

a. Tube of Larger Diameter Than Original. A tube (sleeve) of larger diameter than the original is used in the method shown in figure 4-41 (A). The forward splice is a 30-degree scarf splice. Cut the rear longeron (right) approximately 4 inches from the centerline of the joint and fit a 1 inch long spacer over the longeron, and edge weld this spacer and longeron. Make a tapered "V" cut approximately 2 inches long in the aft end of the outer sleeve, and swage the end of the outer sleeve to fit the longeron and weld.

b. Tube of Same Diameter as Original. In the method shown in figure 4-41 (B) the new section is the same size as the longeron forward (left) of the fitting. The rear end (right) of the tube is cut at 30 degrees and forms the outside sleeve of the scarf splice. A sleeve is centered over the forward joint as indicated.

c. Simple Sleeve. In figure 4-41 (C), it is assumed the longeron is the same size on each side of the fitting. It is repaired by a sleeve of larger diameter than the longeron.

d. Large Difference in Longeron Diameter Each Side of Fitting. Figure 4-41 (D) assumes that there is 1/4-inch difference in the diameter of the longeron on the two sides of the fitting. The section of longeron forward (left) of the fitting is cut at 30 degrees, and a section of tubing of the same size as the tube and of such length as to extend well to the rear (right) of the fitting is slipped through it. One end is cut at 30 degrees to fit the 30-degree scarf at left, and the other end fishmouthed. This makes it possible to insert a tube of proper diameter to form an inside sleeve for the tube on the left of the fitting and an outside sleeve for the tube on the right of the fitting.

4-99. ENGINE-MOUNT REPAIRS. All welding on an engine mount must be of the highest quality, since vibration tends to accentuate any minor defect. Engine-mount members should preferably be repaired by using a larger diameter replacement tube, telescoped over the stub of the original member, and using fishmouth and rosette welds. However, 30-degree scarf welds in place of the fishmouth welds will be considered acceptable for engine-mount repair work.

a. Repaired engine mounts must be checked for accurate alignment. When tubes are used to replace bent or damaged ones, the original alignment of the structure must be maintained. When drawings are not available, this can be done by measuring the distance between points of corresponding members that have not been distorted.

b. Grind out all cracked welds.

c. Use only high-grade metallurgically controlled (mc) welding rods for engine-mount repairs.

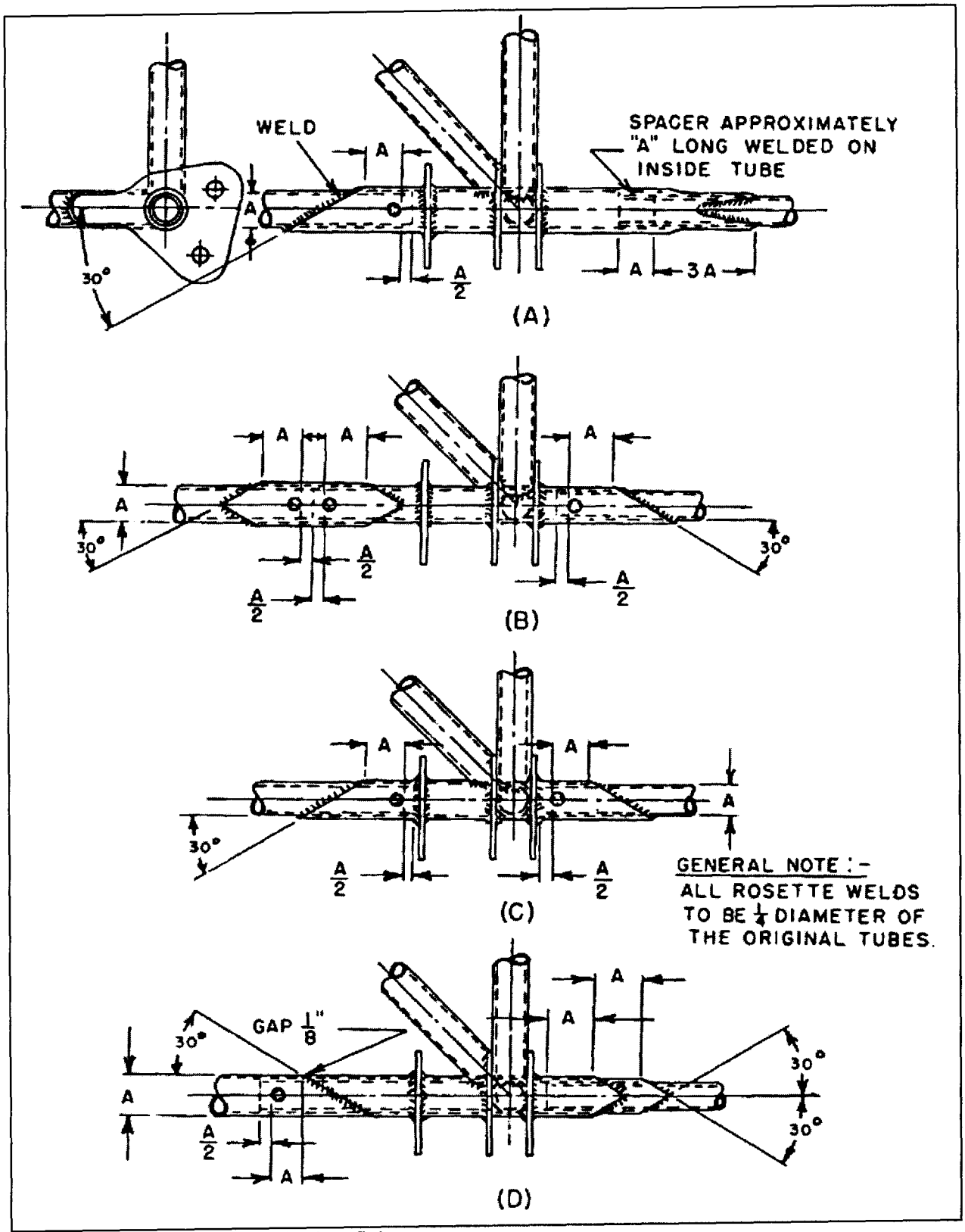

FIGURE 4-41. Repairs at built-in fuselage fittings.

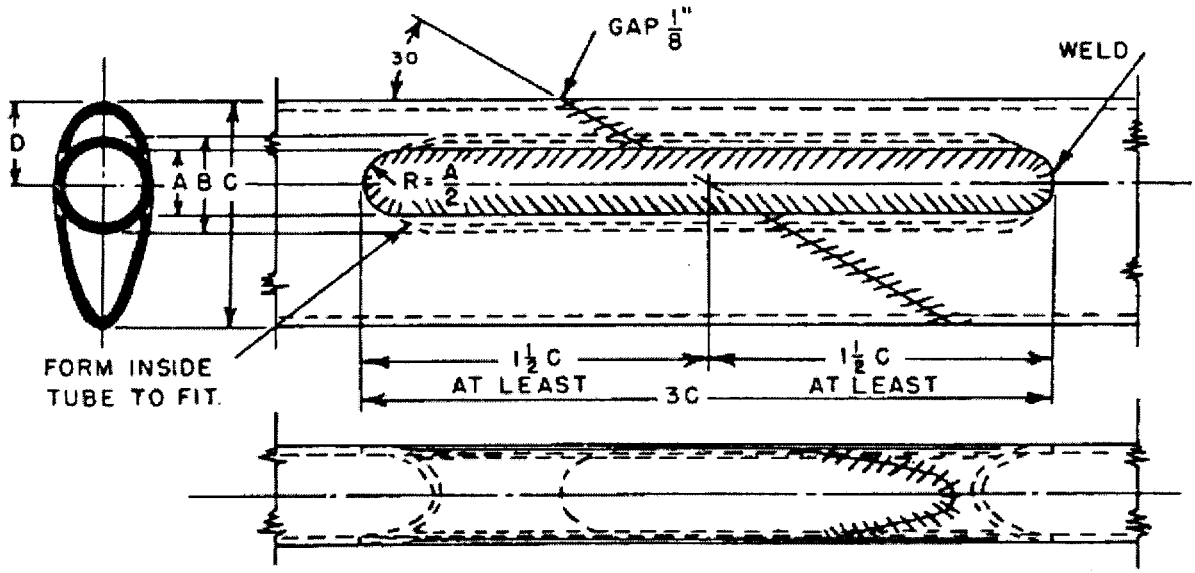

A- Slot Width (Original Tube).
B- Outside Diameter (Insert Tube).
C- Streamline Tube Length of Major Axis.

S.L. Size	A	B	C	D
1"	.375	.563	1.340	.496
1-¼	.375	.688	1.670	.619
1-½	.500	.875	2.005	.743
1-¾	.500	1.000`	2.339	.867
2	.500	1.125	2.670	.991
2-¼	.500	1.250	3.008	1.115
2-½	.500	1.375	3.342	1.239

ROUND INSERT TUBE (B) SHOULD BE AT LEAST OF SAME MATERIAL AND ONE GAUGE THICKER THAN ORIGINAL STREAMLINE TUBE (C).

FIGURE 4-42. Streamline tube splice using round tube (applicable to landing gear).

d. shown in figure 4-35 through figure 4-45. However, it will always be necessary to ascertain whether or not the members are heat treated. The axle assembly as shown in figure 4-47 is, in general, of a nonrepairable type for the following reasons.

(1) The axle stub is usually made from a highly heat-treated nickel alloy steel and carefully machined to close tolerances. These stubs are usually replaceable and must be replaced if damaged.

(2) The oleo portion of the structure is generally heat treated after welding, and is perfectly machined to ensure proper functioning of the shock absorber. These parts would be distorted by welding after machining.

4-103. REPAIRS TO WELDED ASSEMBLIES. These repairs may be made by the following methods.

a. A welded joint may be repaired by cutting out the welded joint and replacing it with one properly gusseted. Standard splicing procedures should be followed.

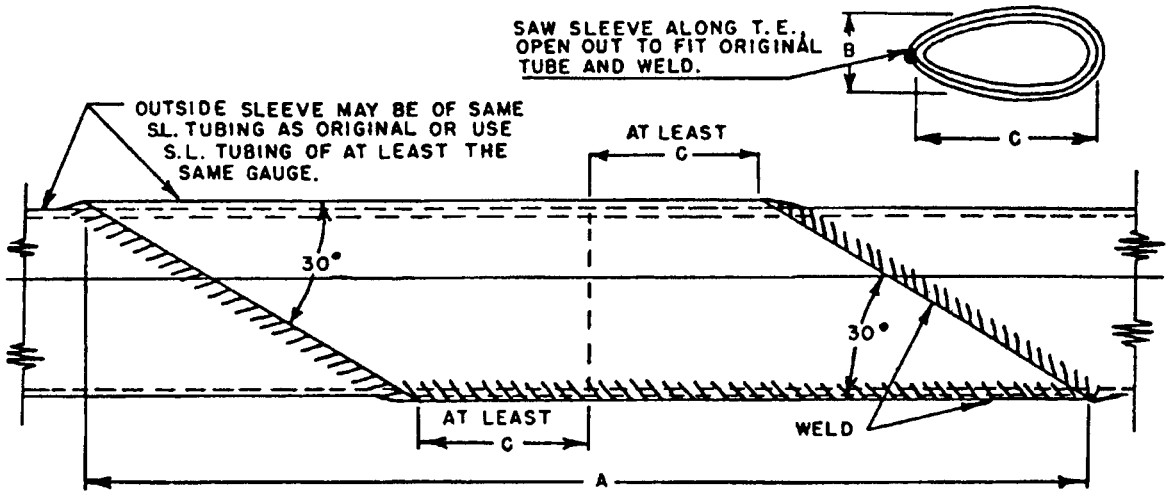

A- Minimum Length of Sleeve.
B- Streamline Tube Length of Minor Axis.
C- Streamline Tube Length of Major Axis.

S.L. Size	A	B	C
1"	7.324	.572	1.340
1-¼	9.128	.714	1.670
1-½	10.960	.858	2.005
1-¾	12.784	1.000	2.339
2	14.594	1.144	2.670
2-¼	16.442	1.286	3.008
2-½	18.268	1.430	3.342

FIGURE 4-43. Streamline tube splice using split sleeve (applicable to wing and tail surface brace struts and other members).

b. Replacing weld deposit by chipping out the metal deposited by the welding process and rewelding after properly reinforcing the joint by means of inserts or external gussets.

4-104. STAINLESS STEEL STRUCTURE. Repair structural components made from stainless steel, particularly the "18-8" variety (18 percent chromium, 8 percent nickel), joined by spot welding, in accordance with the instructions furnished by the manufacturer, DER, or FAA. Substitution of bolted or riveted connections for spot-welded joints are to be specifically approved by a DER or the FAA. Repair secondary structural and nonstructural elements such as tip bows or leading and trailing edge tip strips of wing and control surfaces by soldering with a 50-50 lead-tin solder or a 60-40 lead-tin solder. For best results, use a flux of phosphoric acid (syrup). Since the purpose of flux is to attack the metal so that the soldering will be effective, remove excess flux by washing the joint. Due to the high-heat conductivity of the stainless steel, use a soldering iron large enough to do the work properly.

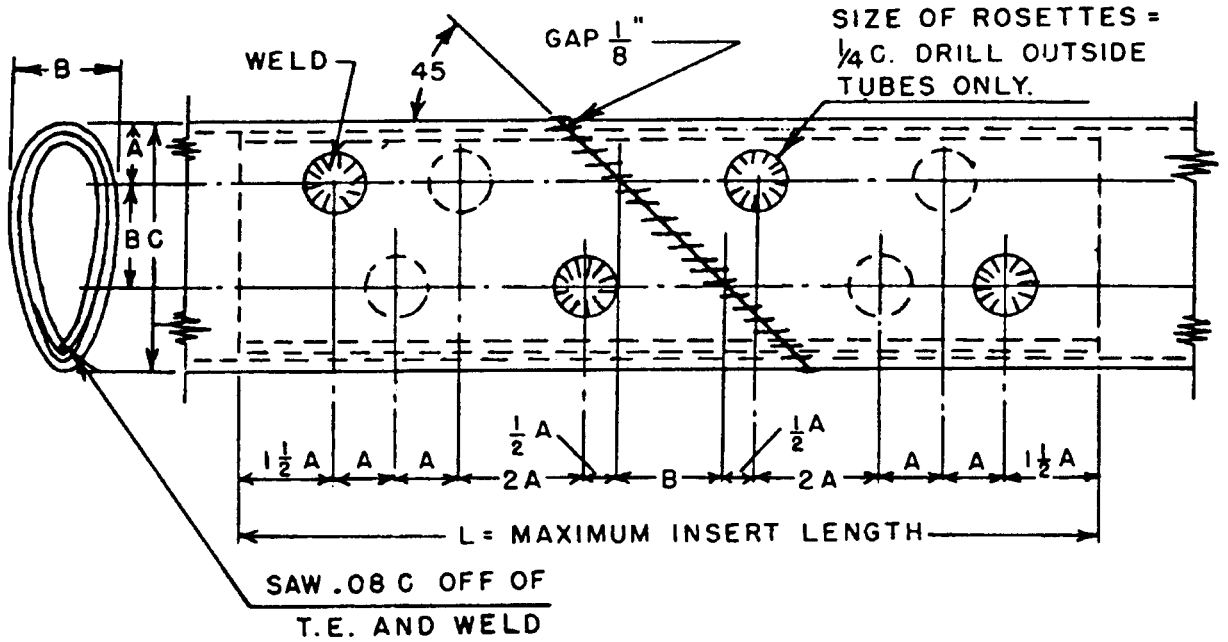

INSERT TUBE IS OF SAME STREAMLINE TUBING AS ORIGINAL.

A- Is ⅔ B.

B- Is Minor Axis Length of Original Streamline Tube.
C- Is Major Axis Length of Original Streamline Tube.

S.L. Size	A	B	C	L
1"	.382	.572	1.340	5.160
1-¼	.476	.714	1.670	6.430
1-½	.572	.858	2.005	7.720
1-¾	.667	1.000	2.339	9.000
2	.763	1.144	2.670	10.300
2-¼	.858	1.286	3.008	11.580
2-½	.954	1.430	3.342	12.880

FIGURE 4-44. Streamline tube splice using split insert (applicable to landing gear).

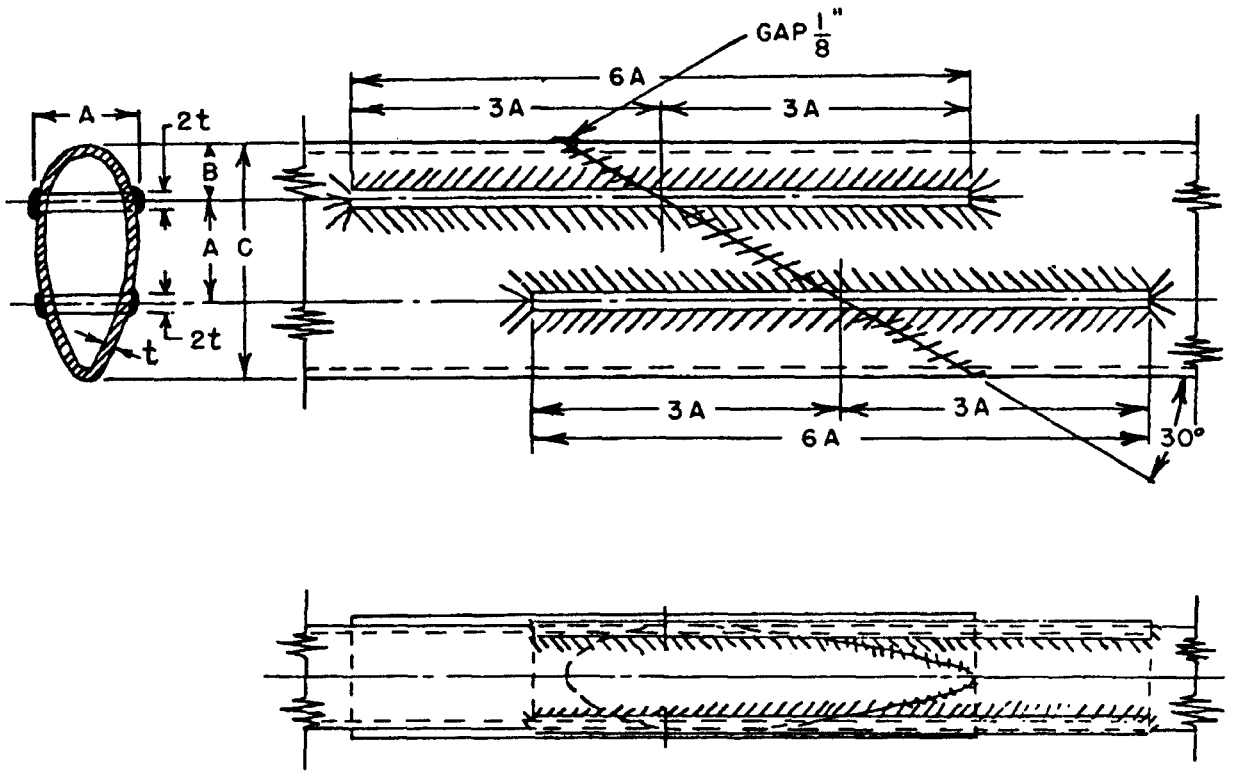

A- Streamline Tube Length of Minor Axis, Plate Widths.
B- Distance of First Plate From Leading Edge, ⅔ A.
C- Streamline Tube Length of Major Axis.

S.L. Size	A	B	C	6A
1"	.572	.382	1.340	3.430
1-¼	.714	.476	1.670	4.280
1-½	.858	.572	2.005	5.150
1-¾	1.000	.667	2.339	6.000
2	1.144	.762	2.670	6.860
2-¼	1.286	.858	3.008	7.720
2-½	1.430	.954	3.342	8.580

FIGURE 4-45. Streamline tube splice using plates (applicable to landing gear).

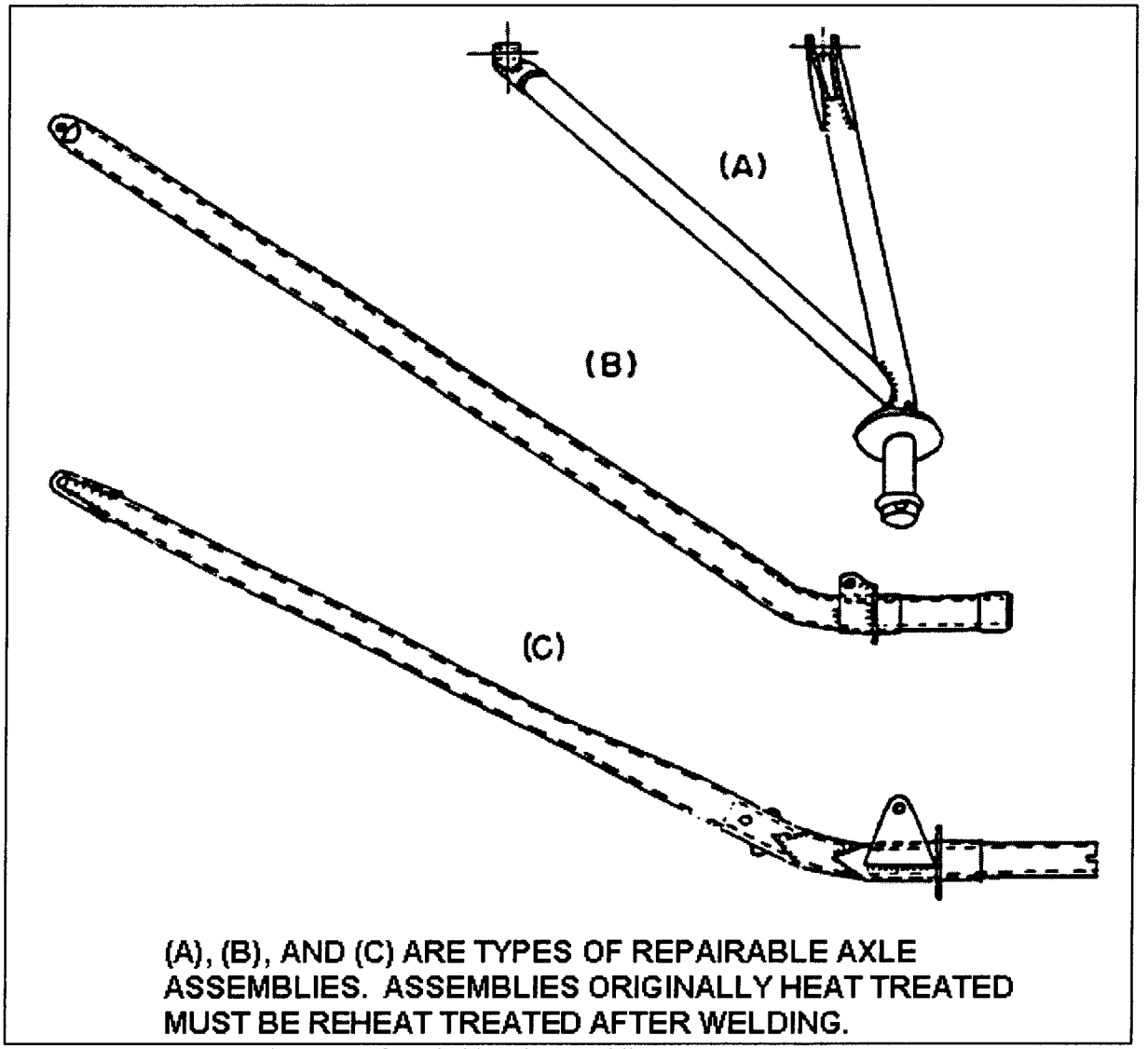

FIGURE 4-46. Representative types of repairable axle assemblies.

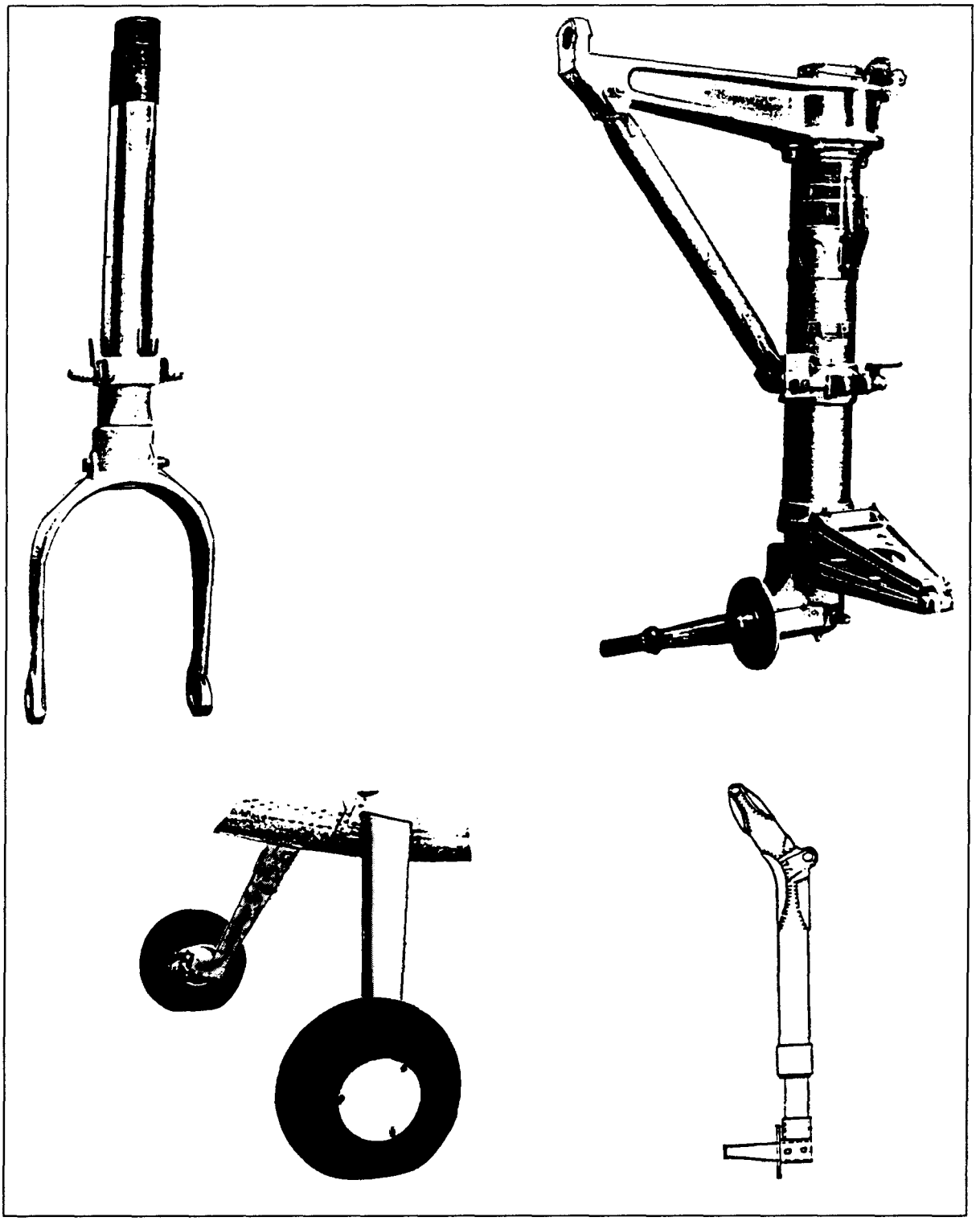

FIGURE 4-47. Landing gear assemblies that CANNOT be repaired by welding.

4-105.—4-110. [RESERVED.]

SECTION 6. WELDING AND BRAZING SAFETY

4-111. GENERAL. A number of inherent hazards exist in the use of oxy-fuel welding and cutting apparatus. It is necessary that proper safety and operating procedures are understood. A thorough understanding of the proper safety and operating procedures minimizes the hazards involved and adds to the pleasure and efficiency of your work.

4-112. FIRE AND EXPLOSION SAFETY. Fires occur in welding areas because flammables are left where they can be ignited by welding sparks or gas welding flames. Before welding, clear the welding area of all flammables such as rags, paper, wood, paint cans, solvent, and trash containers. Do not weld in areas where flammables are present.

a. Unless absolutely necessary, never weld any tank or radiator that has had a flammable in it, including gasoline, av-gas, motor oil, hydraulic fluid, or any other liquid that could ignite if the vapor and temperature reach a flashpoint. Explosions often occur when empty tanks are being welded or cut open with a torch.

b. If welding such tanks or radiator coolers is absolutely necessary, the tank must first be washed with a caustic-based, water-soluble liquid, rinsed with plenty of clear water, and then dried. Before welding, the tank or container should be thoroughly purged with argon, or other inert gas, while the welding is in process.

4-113. WELDING WORK AREA.

a. The work area must have a fireproof floor, concrete floors are recommend.

b. Use heat-resistant shields to protect nearby walls or unprotected flooring from sparks and hot metal.

c. Maintain an adequate suction ventilation system to prevent the concentration of oxygen/fuel gas, flammable gases, and/or toxic fumes. It is important to remember that oxygen will not burn. The presence of oxygen, however, serves to accelerate combustion, and causes materials to burn with great intensity.

CAUTION: Oil and grease in the presence of oxygen can ignite and burn violently.

d. A completely clean welding shop area with white walls, ceiling, and floor; and with plenty of light, is better for welding. The better the lighting conditions, the easier it is to see the weld puddle and make excellent aircraft-quality welds.

e. During oxy-fuel processes use work benches or tables with fireproof tops. Fire bricks commonly top these surfaces and support the work.

f. Chain or otherwise secure oxygen and fuel gas cylinders to a wall, bench, post, cylinder cart, etc. This will protect them from falling and hold them upright.

4-114. FIRE PROTECTION. Practice fire prevention techniques whenever oxy-fuel operations are in progress. Simple precautions prevent most fires, and minimize damage in the event a fire does occur. Always practice the following rules and safety procedures.

a. Inspect oxy-fuel apparatus for oil, grease, or damaged parts. DO NOT use the oxy-fuel apparatus if oil or grease is present or if damage is evident. Have the oxy-fuel apparatus cleaned and/or repaired by a qualified repair technician before it is used.

b. Never use oil or grease on or around any oxy-fuel apparatus. Even a trace of oil or grease can ignite and burn violently in the presence of oxygen.

c. Keep flames, heat, and sparks away from cylinders and boxes.

d. Flying sparks can travel as much as 35 feet. Move combustibles a safe distance away from areas where oxy-fuel operations are performed.

e. Use approved heat-resistant shields to protect nearby walls, floor, and ceiling.

f. Have a fire extinguisher of the proper class (ABC) and size in the work area. Inspect it regularly to ensure that it is in proper working order. Know how it is used.

g. Use oxy-fuel equipment only with the gases for which it is intended.

h. DO NOT open an acetylene cylinder valve more than approximately 1-1/2 turns and preferably no more than 3/4 of a turn. Keep the cylinder wrench, if one is required, on the cylinder valve so, if necessary, the cylinder may be turned off quickly.

i. On all gases except acetylene, open the cylinder valve completely to seal the cylinder back-seal packing.

j. Never test for gas leaks with a flame. Use an approved leak-detector solution.

k. When work is complete, inspect the area for possible fires or smoldering materials.

l. Special care should be taken when welding structural tubing that has been coated on the inside with linseed oil. Smoke and fire may be generated by the heat of the torch. Ensure that an observer with a fire extinguisher is close.

4-115. PROTECTIVE APPAREL.

a. Protect yourself from sparks, flying slag, and flame brilliance at all times.

(1) For gas welding and brazing, use number 3 or 4 green-shaded tempered lenses.

(2) When gas welding aluminum, use cobalt-blue tint lenses.

(3) When arc welding, including TIG, MIG, and plasma cutting; use number 9 to 12 green lenses and a full face-and-neck covering helmet.

(4) Electronically darkening lenses provide number 3 to 12 automatic darkening as soon as the arc is ignited.

b. Wear protective gloves, sleeves, aprons, and lace-up shoes to protect skin and clothing from sparks and slag.

CAUTION: Keep all clothing and protective apparel absolutely free of oil or grease.

4-116. FIRST-AID KITS. Always keep a special welder's first-aid kit where it is easily accessible. Burns are the most common welding accidents.

4-117.—4-128. [RESERVED.]

TABLE 5-2. Listing of commonly accepted standards and specifications for magnetic particle inspection.

NUMBER	TITLE
ASTM STANDARDS	
ASTM A275/A275 M-96	Standard Test Method for Magnetic Particle Examination of Steel Forgings. 1995
ASTM A456/A456 M Rev. A.	Standard Specification for Magnetic Particle Examination of Large Crankshaft Forgings. 1995
ASTM D96	Standard Test Methods for Water and Sediment in Crude Oils by Centrifuge Method (Field Procedure). 1988
ASTM E125-63 (1993)	Standard Reference Photographs for Magnetic Particle Indications on Ferrous Castings. (Revised 1993) 1963
ASTM E1316-95C	Standard Terminology for Nondestructive Examination. 1995 (Replaces ASTM E269).
SAE-AMS SPECIFICATIONS	
AMS 2300G	Premium Aircraft-Quality Steel Cleanliness Magnetic Particle Inspection Procedure. 1991 (Revised 1995)
MAM 2300A	Premium Aircraft Quality Steel Cleanliness Magnetic Particle Inspection Procedure Metric (SI) Measurement. 1992
AMS 2303C	Aircraft Quality Steel Cleanliness Martensitic Corrosion Resistant Steels Magnetic Particle Inspection Procedure. 1993
MAM 2303A	Aircraft Quality Steel Cleanliness Martensitic Corrosion Resistant Steels Magnetic Particle Inspection Procedure Metric (SI) Measurement. 1993
AMS 2641	Vehicle, Magnetic Particle Inspection Petroleum Base. 1988
AMS 3040B	Magnetic Particles, Nonfluorescent, Dry Method. 1995
AMS 3041B	Magnetic Particles, Nonfluorescent, Wet Method, Oil Vehicle, Ready-To-Use. 1988
AMS 3042B	Magnetic Particles, Nonfluorescent, Wet Method, Dry Powder. 1988
AMS 3043A	Magnetic Particles, Nonfluorescent, Wet Method, Oil Vehicle, Aerosol Packaged. 1988
AMS 3044C	Magnetic Particles, Fluorescent, Wet Method, Dry Powder. 1989
AMS 3045B	Magnetic Particles, Fluorescent, Wet Method, Oil Vehicle Ready-to-Use. 1989
AMS 3046B	Magnetic Particles, Fluorescent, Wet Method, Oil Vehicle, Aerosol Packaged. 1989
U.S. GOVERNMENT SPECIFICATIONS	
DOD-F-87935	Fluid, Magnetic Particle Inspection, Suspension. 1993
Mil-Std-271F	Requirements for Nondestructive Testing Methods. 1993
Mil-Std-410E	Nondestructive Testing Personnel Qualifications and Certifications. 1991
MIL-HDBK-728/1	Nondestructive Testing. 1985
MIL-HDBK-728/4A	Magnetic Particle Testing. 1993
OTHER PUBLICATIONS	
SNT-TC-1A	American Society for Nondestructive Testing. Recommended Practice . 1992 (Personnel Qualification and Certification in Nondestructive Testing and Recommended Training Courses) Note: Updated every 4 years - 1996 edition due in early 1997.
ATA No. 105	Air Transport Association of America. Guidelines for Training and Qualifying Personnel in Nondestructive Testing Methods, (Revision 4 1993)
ASM Handbook, Volume 17	Nondestructive Evaluation and Quality Control. 1989

5-45. PREPARATION OF SURFACE.

a. Remove protective coatings according to the manufacturer's instructions if necessary. Unless otherwise specified, magnetic particle examination should not be performed with coatings in place that could prevent the detection of surface defects in the ferro-magnetic substrate. Such coatings include paint or chromeplate thicker than 0.003 inch, or ferromagnetic coatings such as electroplated nickel thicker than 0.001 inch.

b. Parts should be free of grease, oil, rust, scale, or other substances which will interfere with the examination process. If required, clean by vapor degrease, solvent, or abrasive means per the manufacturer's instructions. Use abrasive cleaning only as necessary to completely remove scale or rust. Excessive blasting of parts can affect examination results.

c. Exercise extreme care to prevent any cleaning material or magnetic particles from becoming entrapped where they cannot be removed. This may require extracting components such as bushings, bearings, or inserts from assemblies before cleaning and magnetic particle examination.

d. A water-break-free surface is required for parts to be examined by water suspension methods. If the suspension completely wets the surface, this requirement is met.

e. Magnetic particle examination of assembled bearings is not recommended because the bearings are difficult to demagnetize. If a bearing cannot be removed, it should be protected from the magnetic particle examination materials and locally magnetized with a magnetic yoke to limit the magnetic field across the bearing.

5-46. METHODS OF EXAMINATION.

Magnetic particle examination generally consists of: the application of magnetic particles; magnetization; determination of field strength; special examination techniques; and demagnetization and post-examination cleaning. Each of these steps will be described in the following paragraphs.

5-47. APPLICATION OF MAGNETIC PARTICLES.

The magnetic particles used can be nonfluorescent or fluorescent (dependent on the examination required) and are applied suspended in a suitable substance. Fluorescent particles are preferred due to their higher sensitivity.

a. Wet Continuous Method. Unless otherwise specified, use only the wet continuous method. In the wet continuous method, the particle suspension is liberally applied to wet all surfaces of the part. The magnetizing current is applied at the instant the suspension is diverted from the part. Apply two shots of magnetizing current, each at least 1/2 second long.

(1) Wet suspensions of fluorescent particles, either in water or oil, should be used for most overhaul and in-service examinations except where the material, size, or shape of the part prohibits its use.

(2) Water, with a suitable rust inhibitor and wetting agent, may be used as a liquid vehicle, provided that magnetic examination equipment is designed for use or is satisfactorily converted for use with water.

b. Dry Continuous Method. This method is not recommended for use on aerospace components because of its lower sensitivity level.

c. Residual Magnetization Method. In this method, the part is magnetized and the magnetizing current is then cut off. If the amperage has been correctly calculated and quality indicator has verified the technique, then one shot will correctly magnetize the part. The magnetic particles are applied to the part after the magnetization. This method is dependent upon the retentiveness of the part, the strength of the applied field, the direction of magnetization, and the shape of the part.

5-48. MAGNETIZATION.

a. Circular. Circular magnetization is induced in the part by the central-conductor method or the direct-contact method. (See figure 5-11.)

(1) Indirect Induction (central-conductor method). Pass the current through a central conductor that passes through the part. When several small parts are examined at one time, provide sufficient space between each piece to permit satisfactory coverage (with particles), magnetization, and examination.

(2) Direct Induction (contact method). Pass current through the part mounted horizontally between contact plates. As an example, circular magnetization of a round steel bar would be produced by placing the ends of the steel bar between the heads of the magnetic inspection machine and passing a current through the bars. Magnetic particles applied either during or after passage of the current, or after passage of the current in magnetically-retentive steels, would disclose discontinuities parallel to the axis of the bar.

NOTE: Exercise extreme caution to prevent burning of the part at the electrode contact areas. Some causes of overheating and arcing are: insufficient contact area, insufficient contact pressure, dirty or coated contact areas, electrode removal during current flow, and too high an amperage setting.

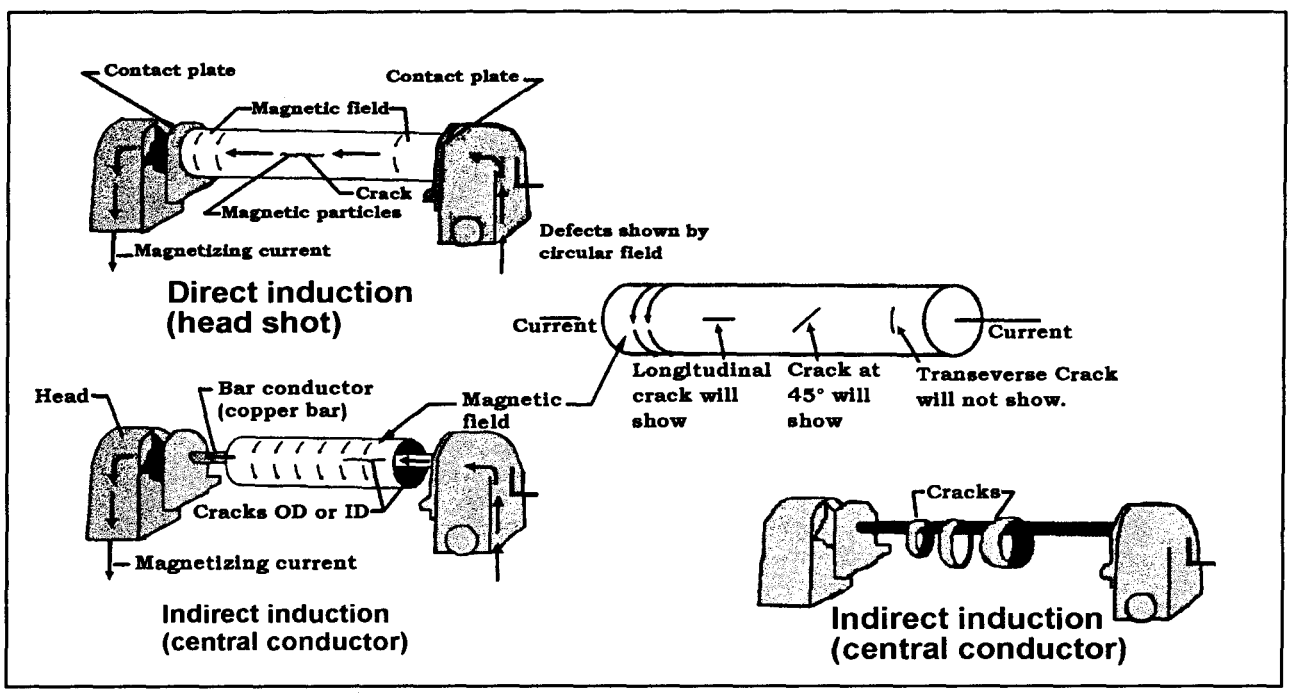

FIGURE 5-11. Circular magnetization.

b. Longitudinal. Longitudinal magnetization is induced in a part by placing the part in a strong magnetic field, such as the center of a coil or between the poles of an electromagnetic yoke. (See figure 5-12.) When using a coil, optimum results are obtained when the following conditions are met.

(1) The part to be examined is at least twice as long as it is wide.

(2) The long axis of the part is parallel to the axis of the coil opening.

(3) The area of the coil opening is at least 10 times the cross-sectional areas of the part.

(4) The part is positioned against the inner wall of the coil.

(5) Three to five turns are employed for hand-held coils formed with cables.

(6) For the 10-to-1 fill factor, the effective region of inspection is 1 coil radius on either side of the coil with 10 percent overlap. (Refer to ASTME-1444.)

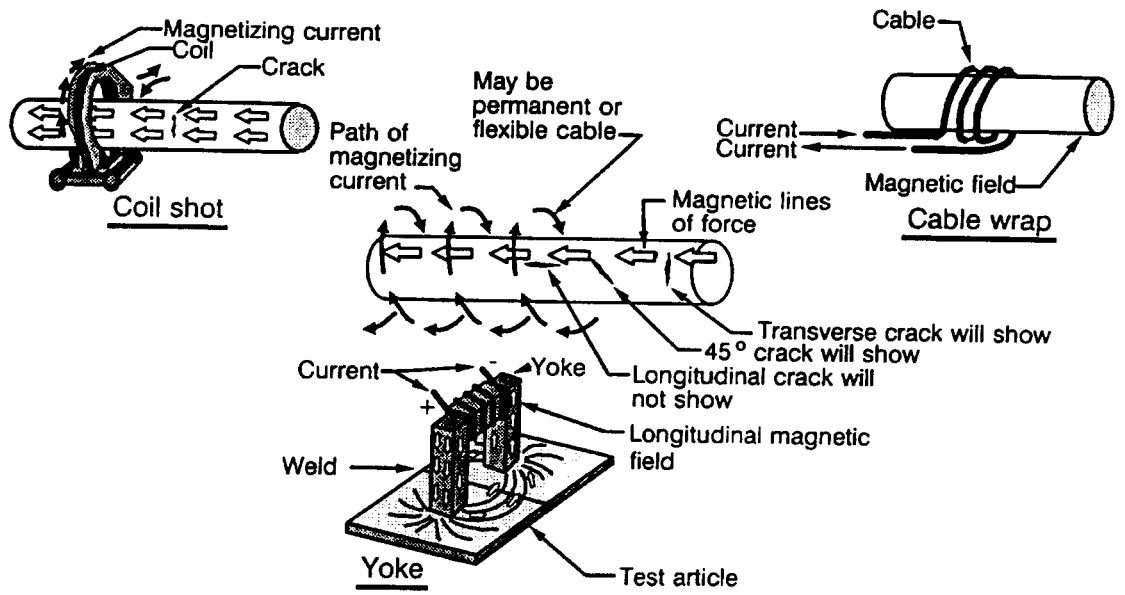

COIL SHOT
The usual way to longitudinally magnetize a part is to place the part lengthwise inside the bottom of the coil. Multiple inspections are necessary on long parts because the effective field extends only 6 to 9 inches on either side of the coil.

CABLE WRAP
Cable wrapping a coil around large or heavy parts is a common practice. Cable length must be kept as short as practical to minimize cable-resistance loss and aid in obtaining higher current amperages. Normally, three to five turns are sufficient.

YOKE
Essentially a yoke is a temporary horseshoe magnet. It is made of low-retentivity iron that is magnetized by a small coil wound around its horizontal bar. Yokes are recommended for parts subject to arc burns and for spot inspection of large parts.

FIGURE 5-12. Longitudinal magnetization.

CAUTION: Improper cleaning methods can cause severe damage or degradation of the item being cleaned. Personnel must select and apply cleaning processes in accordance with aircraft, engine, propeller, or appliance manufacturer's recommendations.

5-63. CLEANERS AND APPLICATIONS. Use a cleaner to remove contaminants from parts prior to the application of penetrant inspection materials. After the inspection is completed, penetrant inspection material residues are removed. The following cleaners are commonly used during the penetrant inspection process.

a. Detergents. Detergent cleaners are water-based chemicals called surfactants, which surround and attach themselves to particles of contaminants allowing them to be washed away.

b. Solvents. Solvents dissolve contaminants such as oils, greases, waxes, sealants, paints, and general organic matter so they can easily be wiped away or absorbed on a cloth. They are also used to remove Method C penetrant material prior to developer application.

c. Alkalies. Alkaline cleaners are water solutions of chemicals that remove contaminants by chemical action or displacement rather than dissolving the contaminant.

d. Paint Removers. The general types of removers used for conventional paint coatings are solvent, bond release, and disintegrating.

e. Salt Baths. Molten salt baths are used in removing heavy, tightly-held scale and oxide from low alloy steels, nickel, and cobalt-base alloys, and some types of stainless steel. They cannot be used on aluminum, magnesium, or titanium alloys.

f. Acids. Solutions of acids or their salts are used to remove rust, scale, corrosion products, and dry shop contamination. The type of acid used and its concentration depends on the part material and contaminants to be removed.

g. Etching Chemicals. Etching chemicals contain a mixture of acids or alkalies plus inhibitors. They are used to remove a thin layer of surface material, usually caused by a mechanical process, that may seal or reduce the opening of any discontinuities. The type of etching solution used depends on the part material and condition.

h. Penetrant Application. Apply the penetrant by spraying, brushing, or by completely submerging the part in a container of penetrant. Wait the recommended amount of time after the penetrant has been applied to allow it to enter any discontinuities

(1) Removal of Excess Penetrant. Excess penetrant must be removed from the part's surface to prevent a loss of contrast between indications of discontinuities and the background during the inspection. Removal may require actually washing or spraying the part with a cleansing liquid, or may simply require wiping the part clean with a solvent-moistened cloth. The removal method is determined by the type of penetrant used.

(2) Drying. If removal of the excess penetrant involves water or other cleaning liquids, drying of the part may be required prior to developer application. When drying is required, the time can be decreased by using ovens or ventilation systems.

i. Developer Application. Apply developer after excess penetrant is removed and, where required, the surface is dried. Apply the developer in a thin uniform layer over the surface to be inspected. Developer acts like a

blotter to assist the natural capillary action bleed-out of the penetrant from discontinuities and to spread the penetrant at discontinuity surface edges to enhance bleed-out indications. After the developer is applied, allow sufficient time for the penetrant to be drawn out of any discontinuities. Follow the manufacturer's recommendations.

j. Inspection for Discontinuities. After the penetrant has sufficiently developed, visually inspect the surface for indications from discontinuities. Evaluate each indication observed to determine if it is within acceptable limits. Visible penetrant inspection is performed in normal visible white light, whereas fluorescent penetrant inspection is performed in black (ultraviolet) light.

k. Post-Cleaning. Remove inspection material residues from parts after completion of penetrant inspection. This residue could interfere with subsequent part processing, or if left on some alloys, it could increase their susceptibility to hydrogen embrittlement, intergranular corrosion, and stress corrosion during service.

5-64. TECHNICAL STANDARDS. Two of the more generally accepted aerospace industry standards are the MIL-I-25135E, Inspection Materials, Penetrants (see table 5-6) and ASTM-E-1417. The penetrant materials specification (MIL-I-25135E) is used to procure penetrant materials and the process control specification (MIL-STD-6866) is used to establish minimum requirements for conducting a penetrant inspection. Table 5-6 provides a partial listing of commonly-accepted standards and specifications for penetrant inspection.

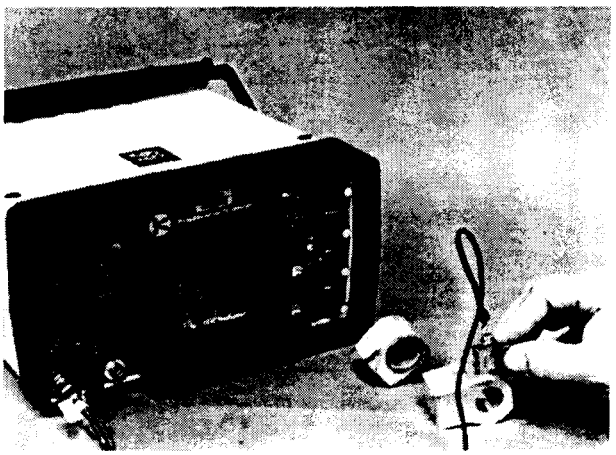

FIGURE 5-17. Typical portable ultrasonic inspection instrument.

ultrasonic pulse, detects and amplifies the returning echo, and displays the detected signal on a cathode ray tube or similar display. Piezoelectric transducers produce longitudinal or shear waves, which are the most commonly used wave forms for aircraft structural inspection.

b. Positioning Fixtures. To direct ultrasound at a particular angle, or to couple it into an irregular surface, transducer positioning fixtures and sound-coupling shoes are employed. (See figure 5-18.) Shoes are made of a plastic material that has the necessary sound-transmitting characteristics. Positioning fixtures are used to locate the transducer at a prescribed point and can increase the sensitivity of the inspection. (See figure 5-19.) If a transducer shoe or positioning fixture is required, the inspection procedure will give a detailed description of the shoe or fixture.

c. Reference Standards. Reference standards are used to calibrate the ultrasonic instrument (see figure 5-20), reference standards serve two purposes to provide an ultrasonic response pattern that is related to the part being inspected, and to establish the required inspection sensitivity. To obtain a representative response pattern, the reference standard configuration is the same as that of the test structure, or is a configuration that provides an ultrasonic response pattern representative of the test structure. The reference standard contains a simulated defect (notch) that is positioned to provide a calibration signal representative of the expected defect. The notch size is chosen to establish inspection sensitivity (response to the expected defect size). The inspection procedure gives a detailed description of the required reference standard.

d. Couplants. Inspection with ultrasonics is limited to the part in contact with the transducer. A layer of couplant is required to couple the transducer to the test piece because ultrasonic energy will not travel through air. Some typical couplants used are: water, glycerin, motor oils, and grease.

5-94. INSPECTION OF BONDED STRUCTURES. Ultrasonic inspection is finding increasing application in aircraft bonded construction and repair. Detailed techniques for specific bonded structures should be obtained from the OEM's manuals, or FAA requirements. In addition, further information on the operation of specific instruments should be obtained from the applicable equipment manufacturer manuals.

a. Types of Bonded Structures. Many configurations and types of bonded structures are in use in aircraft. All of these variations complicate the application of ultrasonic inspections. An inspection method that works well on one part or one area of the part may not be applicable for different parts or areas of the same part. Some of the variables in the types of bonded structures are as follows.

(1) Top skin material is made from different materials and thickness.

(2) Different types and thickness of adhesives are used in bonded structures.

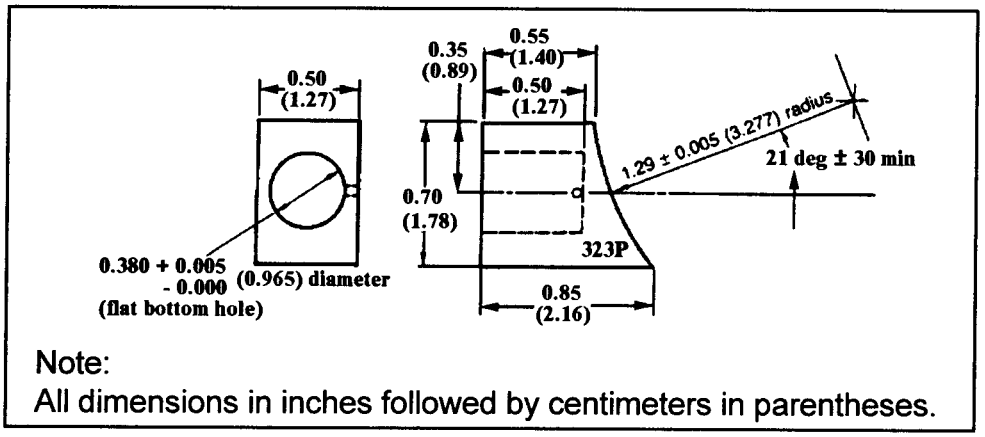

FIGURE 5-18. Example of position fixture and shoe.

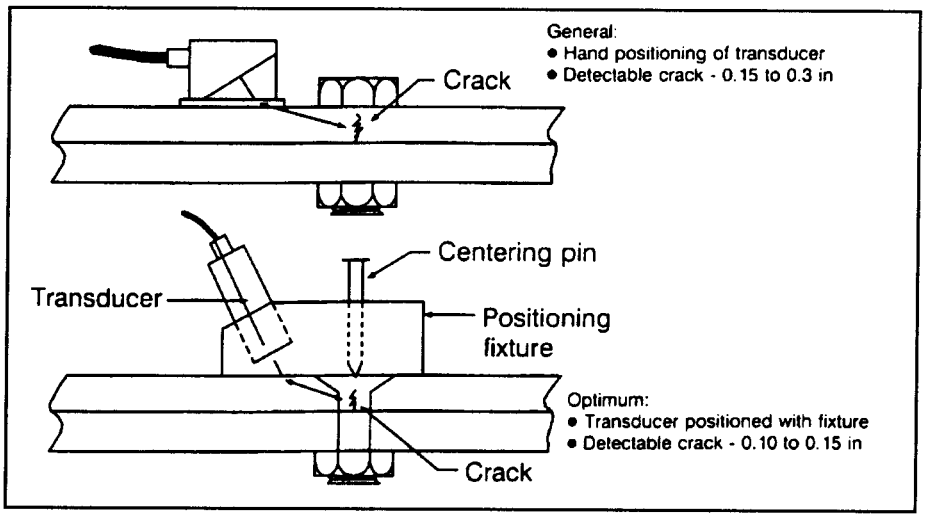

FIGURE 5-19. Example of the use if a transducer positioning fixture.

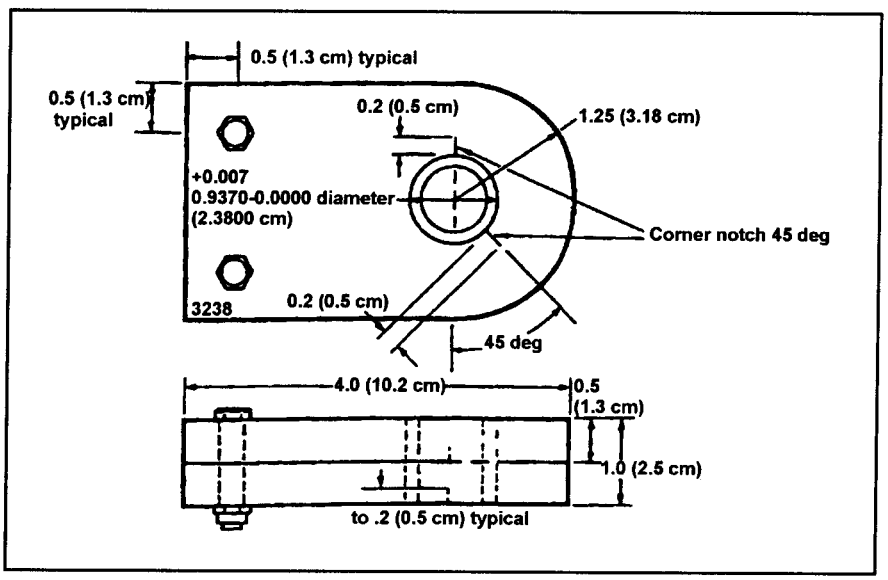

FIGURE 5-20. Example of a typical reference standard.

CHAPTER 6. CORROSION, INSPECTION & PROTECTION

SECTION 1. GENERAL

6-1. GENERAL. The purpose of this chapter is to provide information that will help maintenance personnel prevent, control, identify, and treat various types of corrosion. (Refer to AC 43-4A, Corrosion Control For Aircraft for a more in-depth study on the detection and treatment of corrosion.)

a. Corrosion is a natural occurrence that attacks metal by chemical or electrochemical action and converts it back to a metallic compound.

b. Four conditions must exist before electrochemical corrosion can occur. (See figure 6-1.) They are:

(1) A metal subject to corrosion (Anode);

(2) A dissimilar conductive material (Cathode), which has less tendency to corrode;

(3) Presence of a continuous, conductive liquid path (Electrolyte); and

(4) Electrical contact between the anode and the cathode (usually in the form of metal-to-metal contact such as rivets, bolts, and corrosion).

c. Elimination of any one of these conditions will stop electrochemical corrosion. (See figure 6-2.)

NOTE: Paint can mask the initial stages of corrosion. Since corrosion products occupy more volume than the original metal, painted surfaces should be inspected often for irregularities such as blisters, flakes, chips, and lumps.

6-2. FACTORS INFLUENCING CORROSION.

a. Some factors which influence metal corrosion and the rate of corrosion are:

(1) Type of metal;

(2) Heat treatment and grain direction;

(3) Presence of a dissimilar, less corrodible metal;

(4) Anodic and cathodic surface areas (in galvanic corrosion);

(5) Temperature;

(6) Presence of electrolytes (hard water, salt water, battery fluids, etc.);

(7) Availability of oxygen;

(8) Presence of biological organisms;

(9) Mechanical stress on the corroding metal; and,

(10) Time of exposure to a corrosive environment.

(11) Lead/graphite pencil marks on aircraft surface metals.

b. Most pure metals are not suitable for aircraft construction and are used only in combination with other metals to form alloys. Most alloys are made up entirely of small crystalline regions, called grains. Corrosion can occur on surfaces of those regions which

are less resistant and also at boundaries between regions, resulting in the formation of pits and intergranular corrosion. Metals have a wide range of corrosion resistance. The most active metals, (those which lose electrons easily), such as magnesium and aluminum, corrode easily. The most noble metals (those which do not lose electrons easily), such as gold and silver, do not corrode easily.

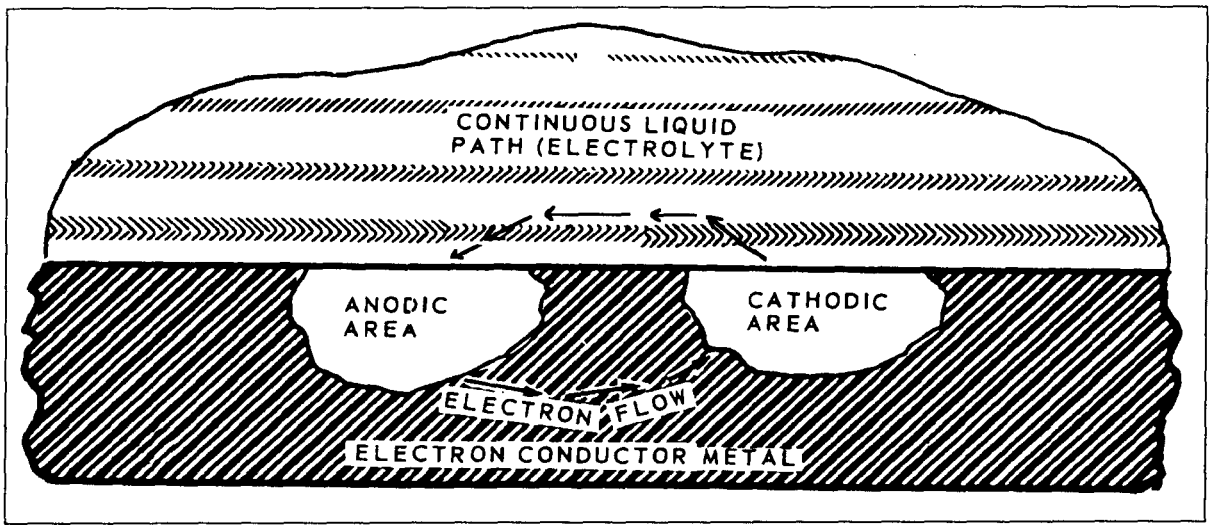

FIGURE 6-1. Simplified corrosion cell showing conditions which must exist for electrochemical corrosion.

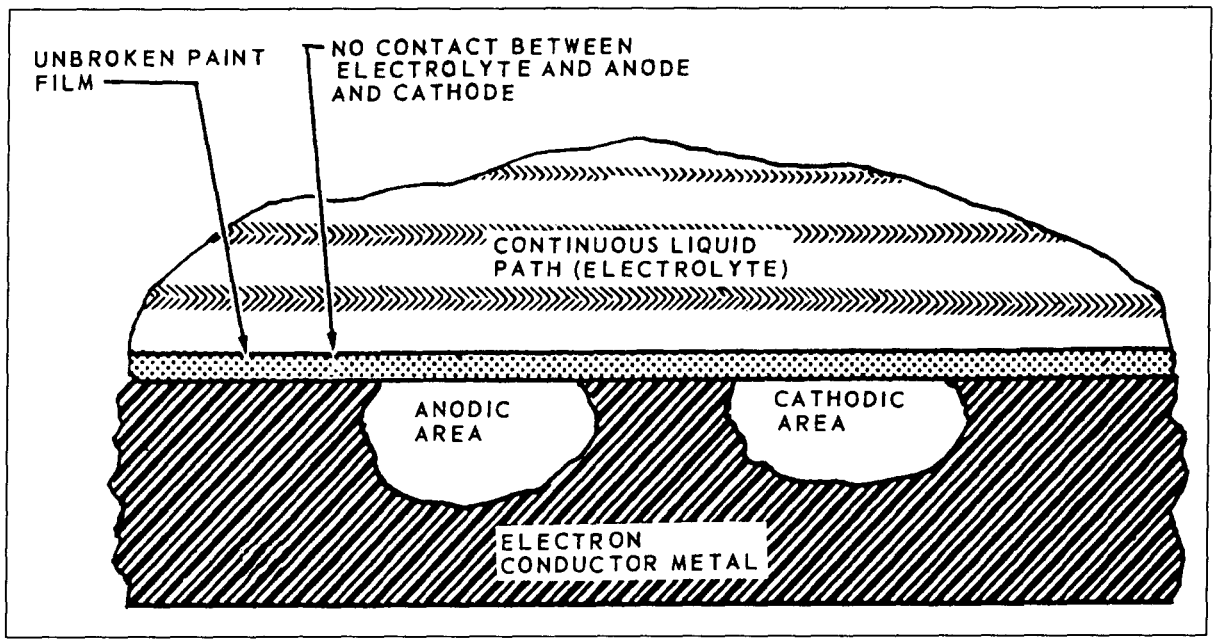

FIGURE 6-2. Elimination of corrosion by application of an organic film to metal surface.

c. Corrosion is quickened by high-temperature environments that accelerate chemical reactions and increase the concentration of water vapor in the air.

d. Electrolytes (electrically-conducting solutions) form on surfaces when condensation, salt spray, rain, or rinse water accumulate. Dirt, salt, acidic gases, and engine exhaust gases can dissolve on wet surfaces, increasing the electrical conductivity of the electrolyte, thereby increasing the rate of corrosion.

e. When some of the electrolyte on a metal surface is partially confined, (such as between faying surfaces or in a deep crevice) the metal around this area corrodes more rapidly. This type of corrosion is called an oxygen concentration cell. Corrosion occurs more rapidly because the reduced oxygen content of the confined electrolyte causes the adjacent metal to become anodic to other metal surfaces on the same part that are immersed in electrolyte or exposed to air.

f. Slime, molds, fungi, and other living organisms (some microscopic) can grow on damp surfaces. Once they are established, the area usually remains damp, increasing the possibility of corrosion.

g. Manufacturing processes such as machining, forming, welding, or heat treatment can leave residual stress in aircraft parts and can cause cracking in a corrosive environment.

6-3. COMMON CORROSIVE AGENTS.

Substances that cause corrosion are called corrosive agents. The most common corrosive agents are acids, alkalies, and salts. The atmosphere and water, the two most common media for these agents, may also act as corrosive agents.

a. Any acid will severely corrode most of the alloys used in airframes. The most destructive are sulfuric acid (battery acid), halogen acids (hydrochloric, hydrofluoric, and hydrobromic), nitrous oxide compounds, and organic acids found in the wastes of humans and animals.

b. Alkalies, as a group, are not as corrosive as acids. Aluminum and magnesium alloys are exceedingly prone to corrosive attack by many alkaline solutions unless the solutions contain a corrosion inhibitor. Substances particularly corrosive to aluminum are washing soda, potash (wood ashes), and lime (cement dust).

c. The major atmospheric corrosive agents are oxygen and airborne moisture. Corrosion often results from the direct action of atmospheric oxygen and moisture on metal nd the presence of additional moisture often accelerates corrosive attack, particularly on ferrous alloys. The atmosphere may also contain other corrosive gases and contaminants, particularly industrial and marine salt spray.

d. The corrosiveness of water depends on the type and quantity of dissolved mineral and organic impurities and dissolved gasses (particularly oxygen) in the water. One characteristic of water that makes it corrosive is its conductivity. Physical factors, such as water temperature and velocity also have a direct bearing on its corrosiveness.

6-4. MICRO-ORGANISMS.

a. Bacteria may be either aerobic or anaerobic. Aerobic bacteria require oxygen to live. They accelerate corrosion by oxidizing sulfur to produce sulfuric acid. Bacteria living adjacent to metals may promote corrosion by depleting the oxygen supply or by releasing metabolic products. Anaerobic bacteria, on the other hand, can survive only when free oxygen

is not present. The metabolism of these bacteria requires them to obtain part of their sustenance by oxidizing inorganic compounds, such as iron, sulfur, hydrogen, and carbon monoxide. The resultant chemical reactions cause corrosion.

b. Fungi are the growths of micro-organisms that feed on organic materials. While low humidity does not kill microbes, it slows their growth and may prevent corrosion damage. Ideal growth conditions for most micro-organisms are temperatures between 68 and 104 °F (20 and 40 °C) and relative humidity between 85 and 100 percent.

c. Damage resulting from microbial growth can occur when any of three basic mechanisms, or a combination of these, is brought into play. First, fungi have a tendency to hold moisture, which contributes to other forms of corrosion. Second, because fungi are living organisms, they need food to survive. This food is obtained from the material on which the fungi are growing. Third, these micro-organisms secrete corrosive fluids that attack many materials, including some that are not fungi nutrient.

d. Microbial growth must be removed completely to avoid corrosion. Microbial growth should be removed by hand with a firm non-metallic bristle brush and water. Removal of microbial growth is easier if the growth is kept wet with water. Microbial growth may also be removed with steam at 100 psi. Protective clothing must be used when using steam for removing microbial growth.

6-5.—6-10. [RESERVED.]

SECTION 2. TYPES OF CORROSION

6-11. GENERAL. All corrosive attacks begin on the surface of the metal making the classification of corrosion by physical appearance a convenient means of identification. (See figure 6-3.)

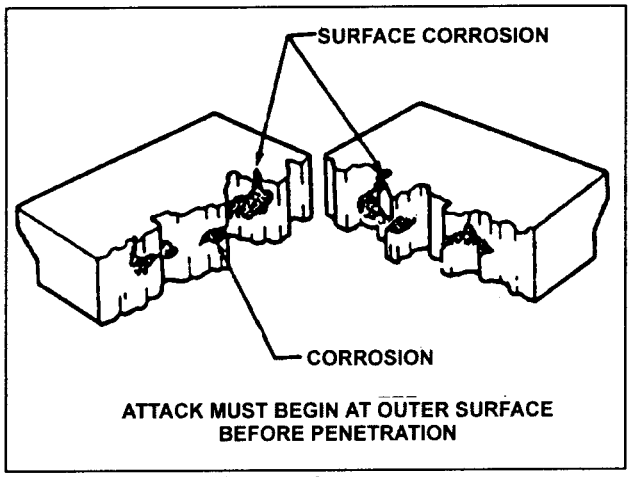

FIGURE 6-3. Corrosion attack.

6-12. GENERAL SURFACE CORROSION. General surface corrosion (also referred to as Uniform Etch or Uniform Attack Corrosion) is the most common form of corrosion and results from a direct chemical attack on a metal surface and involves only the metal surface. (See figure 6-4.) General surface corrosion usually occurs over a wide area and is more or less equal in dispersion. On a polished surface, this type of corrosion is first seen as a general dulling of the surface, and if allowed to continue, the surface becomes rough and possibly frosted in appearance. The discoloration or general dulling of metal created by exposure to elevated temperatures is not to be considered general surface corrosion.

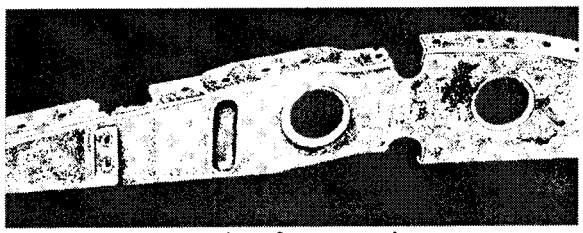

FIGURE 6-4. General surface corrosion.

6-13. PITTING CORROSION. Pitting corrosion is one of the most destructive and intense forms of corrosion. It can occur in any metal but is most common on metals that form protective oxide films, such as aluminum and magnesium alloys. It is first noticeable as a white or gray powdery deposit, similar to dust, which blotches the surface. When the deposit is cleaned away, tiny holes or pits can be seen in the surface. (See figures 6-5(a) and 6-5(b).) These small surface openings may penetrate deeply into structural members and cause damage completely out of proportion to its surface appearance.

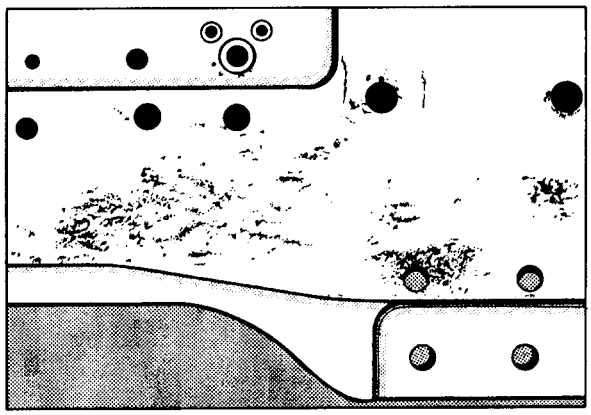

FIGURE 6-5(a). Pitting corrosion (external view).

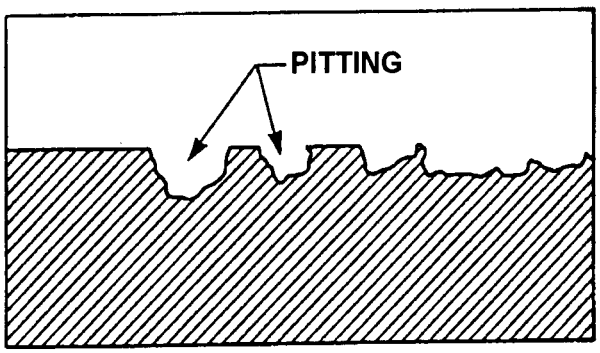

FIGURE 6-5(b). Pitting corrosion (magnified cross section).

6-14. CONCENTRATION CELL CORROSION. Concentration cell corrosion, (also known as Crevice Corrosion) is corrosion of metals in a metal-to-metal joint, corrosion at the edge of a joint even though the joined metals are identical, or corrosion of a spot on the metal surface covered by a foreign material. Metal ion concentration cells and oxygen concentration cells are the two general types of concentration cell corrosion. (See figure 6-6.)

a. Metal Ion Concentration Cells. The solution may consist of water and ions of the metal which is in contact with water. A high concentration of the metal ions will normally exist under faying surfaces where the solution is stagnant, and a low concentration of metal ions will exist adjacent to the crevice which is created by the faying surface. An electrical potential will exist between the two points; the area of the metal in contact with the low concentration of metal ions will be anodic and corrode, and the area in contact with the high metal ion concentration will be cathodic and not show signs of corrosion.

b. Oxygen Concentration Cells. The solution in contact with the metal surface will normally contain dissolved oxygen. An oxygen cell can develop at any point where the oxygen in the air is not allowed to diffuse into the solution, thereby creating a difference in oxygen concentration between two points. Typical locations of oxygen concentration cells are under gaskets, wood, rubber, and other materials in contact with the metal surface. Corrosion will occur at the area of low oxygen concentration (anode). Alloys such as stainless steel are particularly susceptible to this type of crevice corrosion.

6-15. ACTIVE-PASSIVE CELLS. Metals which depend on a tightly adhering passive film, usually an oxide, for corrosion protection are prone to rapid corrosive attack by active-passive cells. Active-passive cells are often referred to as a type of concentration cell corrosion. However, the active-passive cell is actually two forms of corrosion working in conjunction. The corrosive action usually starts as an oxygen concentration cell. As an example, salt deposits on the metal surface in the presence of water containing oxygen can create the oxygen cell. The passive film will be broken beneath the salt crystals. Once the passive film is broken, the active metal beneath the film will be exposed to corrosive attack. (See figure 6-7.) Rapid pitting of the active metal will result. This reaction can become locally intense due to several factors. First the reaction is augmented by the affected area, since the proportion of the exposed base metal is small compared to the surrounding non-reactive metal. This effectively concentrates the focal point of the reaction, often resulting in deep pits in a short time and a greater rate of corrosion.

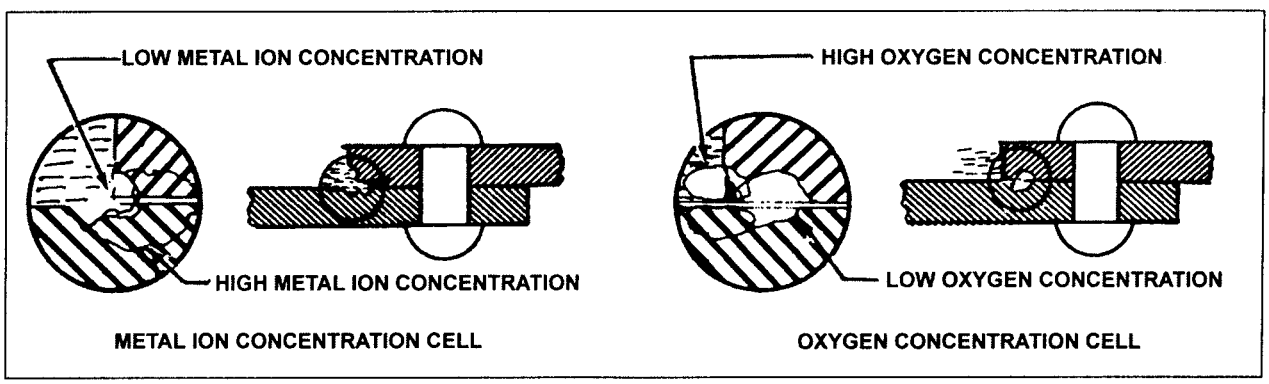

FIGURE 6-6. Concentration cell corrosion.

6-16. FILIFORM CORROSION. Filiform corrosion is a special form of oxygen concentration cell which occurs on metal surfaces having an organic coating system. It is recognized by its characteristic worm-like trace of corrosion products beneath the paint film. (See figure 6-8.) Polyurethane finishes are especially susceptible to filiform corrosion. Filiform occurs when the relative humidity of the air is between 78 and 90 percent and the surface is slightly acidic. This corrosion usually attacks steel and aluminum surfaces. The traces never cross on steel, but they will cross under one another on aluminum which makes the damage deeper and more severe for aluminum. If the corrosion is not removed, the area treated, and a protective finish applied, the corrosion can lead to inter-granular corrosion, especially around fasteners and at seams. Filiform corrosion can be removed using glass bead blasting material with portable abrasive blasting equipment or sanding. Filiform corrosion can be prevented by storing aircraft in an environment with a relative humidity below 70 percent, using coating systems having a low rate of diffusion for oxygen and water vapors, and by washing the aircraft to remove acidic contaminants from the surface.

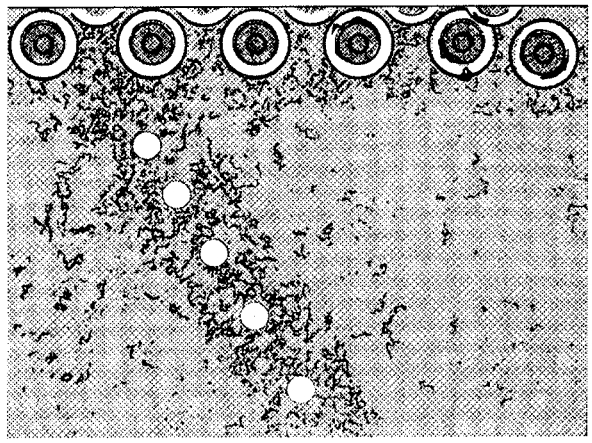

FIGURE 6-8. Filiform corrosion.

6-17. INTERGRANULAR CORROSION. Inter-granular corrosion is an attack on the grain boundaries of a metal. A highly magnified cross section of any commercial alloy shows the granular structure of the metal. It consists of quantities of individual grains, and each of these tiny grains has a clearly defined boundary which chemically differs from the metal within the grain. The grain boundary and the grain center can react with each other as anode and cathode when in contact with an electrolyte. (See figure 6-9.) Rapid selective corrosion of the grain boundaries can occur. High-strength aluminum alloys such as 2014 and 7075 are more susceptible to inter-granular corrosion if they have been improperly heat-treated and then exposed to a corrosive environment.

6-18. EXFOLIATION CORROSION. Exfoliation corrosion is an advanced form of inter-granular corrosion and shows itself by lifting up the surface grains of a metal by the force of expanding corrosion products occurring at the grain boundaries just below the surface. (See figure 6-10.) It is visible evidence of inter-granular corrosion and is most often seen on extruded sections where grain thickness are usually less than in rolled forms.

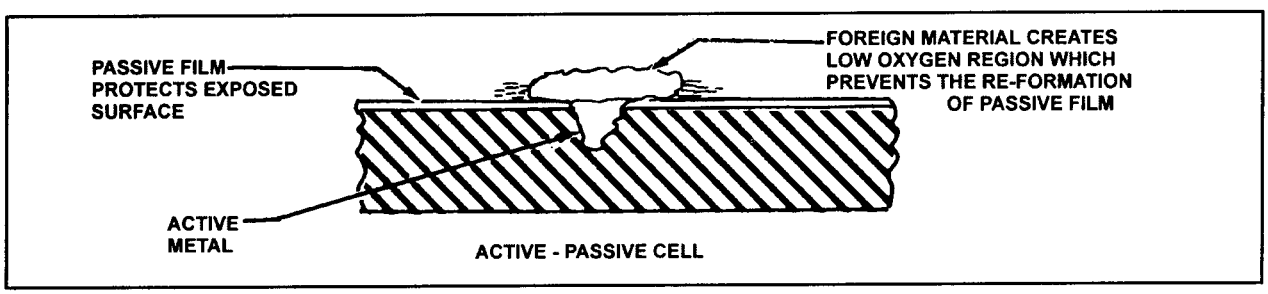

FIGURE 6-7. Active-passive cell.

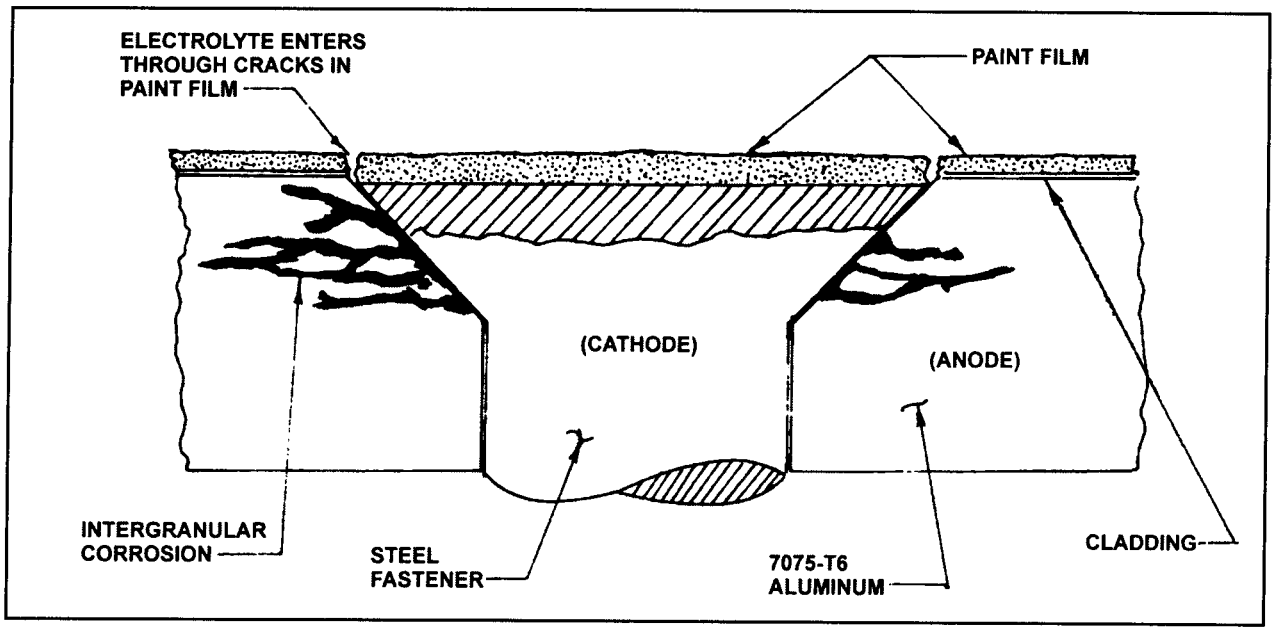

FIGURE 6-9. Inter-granular Corrosion of 7075-T6 aluminum adjacent to steel fastener.

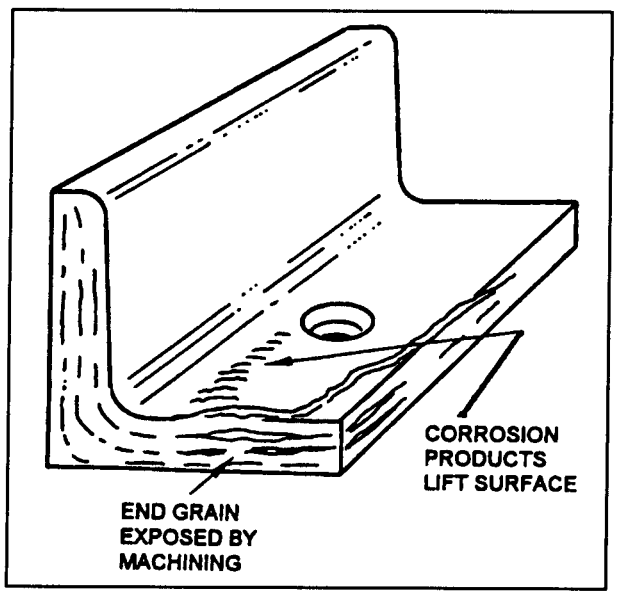

FIGURE 6-10. Exfoliation corrosion.

6-19. GALVANIC CORROSION. Galvanic corrosion occurs when two dissimilar metals make contact in the presence of an electrolyte. (See figure 6-11.) It is usually recognizable by the presence of a build-up of corrosion at the joint between the metals.

6-20. STRESS CORROSION CRACKING. This form of corrosion involves a constant or cyclic stress, acting in conjunction with a damaging chemical environment. The stress may be caused by internal or external loading.

a. Internal stress may be trapped in a part of structure during manufacturing processes such as cold working or by unequal cooling from high temperatures. Most manufacturers follow up these processes with a stress relief operation. Even so, sometimes stress remains trapped. The stress may be externally introduced in part structure by riveting, welding, bolting, clamping, press fit, etc. If a slight mismatch occurs, or a fastener is over-torque, internal stress will be present.

b. Internal stress is more important than design stress, because stress corrosion is difficult to recognize before it has overcome the design safety factor. The level of stress varies from point to point within the metal. Stresses near the yield strength are generally necessary to promote stress corrosion cracking. (See figure 6-12.) However, failures may occur at lower stresses. Specific environments have been identified which cause stress corrosion cracking of certain alloys.

CHAPTER 7. AIRCRAFT HARDWARE, CONTROL CABLES, AND TURNBUCKLES

SECTION 1. RIVETS

7-1. GENERAL.

a. Standard solid-shank rivets and the universal head rivets (AN470) are used in aircraft construction in both interior and exterior locations. All protruding head rivets may be replaced by MS20470 (supersedes AN470) rivets. This has been adopted as the standard for protruding head rivets in the United States.

b. Roundhead rivets (AN430) are used in the interior of aircraft except where clearance is required for adjacent members.

c. Flathead rivets (AN442) are used in the interior of the aircraft where interference of adjacent members does not permit the use of roundhead rivets.

d. Brazierhead rivets (AN455 and AN456) are used on the exterior surfaces of aircraft where flush riveting is not essential.

e. Countersunk head rivets MS20426 (supersedes AN426 100-degree) are used on the exterior surfaces of aircraft to provide a smooth aerodynamic surface, and in other applications where a smooth finish is desired. The 100-degree countersunk head has been adopted as the standard in the United States. Refer to MIL-HD BK5 Metallic Materials and Elements for Fight Vehicle Structures, and U.S.A.F./Navy T./O. 1-1A-8, Structural Hardware."

f. Typical rivet types are shown in table 7-10.

7-2. MATERIAL APPLICATIONS.

a. Rivets made with 2117-T4 are the most commonly used rivets in aluminum alloy structures. The main advantage of 2117-T4 is that it may be used in the condition received without further treatment.

b. The 2017-T3, 2017-T31, and 2024-T4 rivets are used in aluminum alloy structures where strength higher than that of the 2117-T4 rivet is needed. See Metallic Materials and Elements for Flight Vehicle Structures (MIL-HDBK-5) for differences between the types of rivets specified here.

c. The 1100 rivets of pure aluminum are used for riveting nonstructural parts fabricated from the softer aluminum alloys, such as 1100, 3003, and 5052.

d. When riveting magnesium alloy structures, 5056 rivets are used exclusively due to their corrosion-resistant qualities in combination with the magnesium alloys.

e. Mild steel rivets are used primarily in riveting steel parts. **Do not** use galvanized rivets on steel parts subjected to high heat.

f. Corrosion-resistant steel rivets are used primarily in riveting corrosion-resistant steel parts such as firewalls, exhaust stack bracket attachments, and similar structures.

g. Monel rivets are used in special cases for riveting high-nickel steel alloys and nickel alloys. They may be used interchangeably with stainless steel rivets as they are more easily driven. However, it is preferable to use stainless steel rivets in stainless steel parts.

h. Copper rivets are used for riveting copper alloys, leather, and other nonmetallic materials. This rivet has only limited usage in aircraft.

i. Hi-Shear rivets are sometimes used in connections where the shearing loads are the primary design consideration. Its use is restricted to such connections. It should be noted that Hi-Shear rivets are not to be used for the installation of control surface hinges and hinge brackets. Do not paint the rivets before assembly, even where dissimilar metals are being joined. However, it is advisable to touch up each end of the driven rivet with primer to allow the later application of the general airplane finish.

j. Blind rivets in the NASM20600 through NASM20603 series rivets and the mechanically-locked stem NAS 1398, 1399, 1738, and 1739 rivets sometimes may be substituted for solid rivets. They should not be used where the looseness or failure of a few rivets will impair the airworthiness of the aircraft. Design allowable for blind rivets are specified in MIL-HDBK-5. Specific structural applications are outlined in NASM33522. Nonstructural applications for such blind rivets as NASM20604 and NASM20605 are contained in NASM33557.

CAUTION: For sheet metal repairs to airframe, the use of blind rivets must be authorized by the airframe manufacturer or approved by a representative of the FAA.

For more information on blind rivets, see page 4-19, f. of this document.

7-3.—7-13. [RESERVED.]

7-149. CABLE SYSTEM INSPECTION. Aircraft cable systems are subject to a variety of environmental conditions and deterioration. Wire or strand breakage is easy to visually recognize. Other kinds of deterioration such as wear, corrosion, and/or distortion are not easily seen; therefore, control cables should be removed periodically for a more detailed inspection.

a. At each annual or 100 hour inspection, all control cables must be inspected for broken wires strands. Any cable assembly that has one broken wire strand located in a critical fatigue area must be replaced.

b. A critical fatigue area is defined as the working length of a cable where the cable runs over, under, or around a pulley, sleeve, or through a fair-lead; or any section where the cable is flexed, rubbed, or worked in any manner; or any point within 1 foot of a swaged-on fitting.

c. A swaged-on fitting can be an eye, fork, ball, ball and shank, ball and double shank, threaded stud, threaded stud and turnbuckle, compression sleeve, or any hardware used as a termination or end fitting on the cable. These fittings may be attached by various swaging methods such as rotary swaging, roll swaging, hydraulic pressing, and hand swaging tools. (See MIL-T-781.) The pressures exerted on the fittings during the swaging process sometimes pinch the small wires in the cable. This can cause premature failure of the pinched wires, resulting in broken wires.

d. Close inspection in these critical fatigue areas, must be made by passing a cloth over the area to snag on broken wires. This will clean the cable for a visual inspection, and detect broken wires if the cloth snags on the cable. Also, a very careful visual inspection must be made since a broken wire will not always protrude or stick out, but may lie in the strand and remain in the position of the helix as it was manufactured. Broken wires of this type may show up as a hairline crack in the wire. If a broken wire of this type is suspected, further inspection with a magnifying glass of 7 power or greater, is recommended. Figure 7-16 shows a cable with broken wires that was not detected by wiping, but was found during a visual inspection. The damage became readily apparent when the cable was removed and bent as shown in figure 7-16.

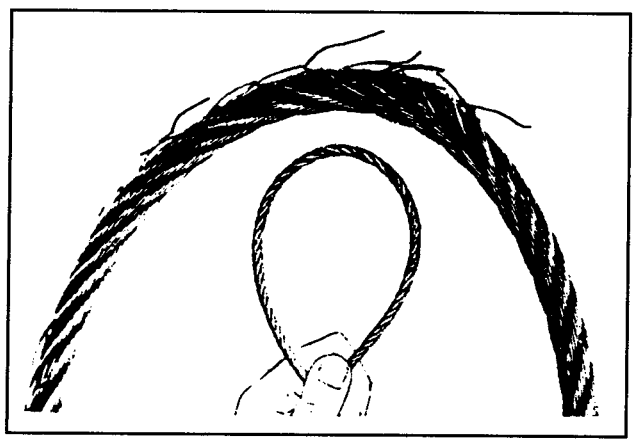

FIGURE 7-16. Cable inspection technique.

e. Kinking of wire cable can be avoided if properly handled and installed. Kinking is caused by the cable taking a spiral shape as the result of unnatural twist. One of the most common causes for this twist is improper unreeling and uncoiling. In a kinked cable, strands and wires are out of position, which creates unequal tension and brings excessive wear at this part of the cable. Even though the kink may be straightened so that the damage appears to be slight, the relative adjustment between the strands has been disturbed so that the cable cannot give maximum service and should be replaced. Inspect cables for a popped core or loose strands. Replace any cable that has a popped core or loose strands regardless of wear or broken wires.

f. Nylon-jacketed cable with any cracks or necking down in the diameter of the jacket shall be replaced. Usable cable life is over when these conditions begin to appear in the nylon jacket.

g. External wear patterns will extend along the cable equal to the distance the cable moves at that location and may occur on one side of the cable or on its entire circumference. Replace flexible and nonflexible cables when the individual wires in each strand appear to blend together (outer wires worn 40 to 50 percent) as depicted in figure 7-17. Actual instances of cable wear beyond the recommended replacement point are shown in figure 7-18.

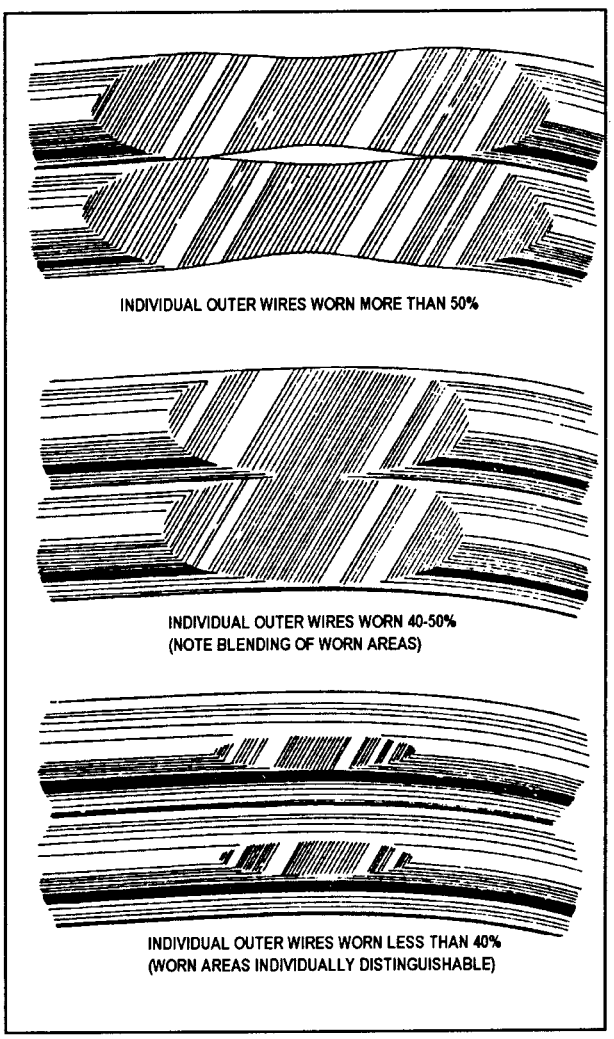

FIGURE 7-17. Cable wear patterns.

h. As wear is taking place on the exterior surface of a cable, the same condition is taking place internally, particularly in the sections of the cable which pass over pulleys and quadrants. This condition (shown in figure 7-19) is not easily detected unless the strands of the cable are separated. This type of wear is a result of the relative motion between inner wire surfaces. Under certain conditions, the rate of this type of wear can be greater than that occurring on the surface.

FIGURE 7-18. Worn cable (replacement necessary).

i. Areas especially conducive to cable corrosion are battery compartments, lavatories, wheel wells, etc.; where a concentration of corrosive fumes, vapors, and liquids can accumulate. Carefully examine any cable for corrosion, when it has a broken wire in a section that is not in contact with a wear-producing airframe component, such as a pulley, fair-lead, etc. If the surface of the cable is corroded, relieve cable tension and carefully force the cable open by reverse twisting and visually inspect the interior. Corrosion on the interior strands of the cable constitutes failure, and the cable must be replaced. If no internal corrosion is detected, remove loose external rust and corrosion with a clean, dry, coarse-weave rag, or fiber brush. Do not use metallic

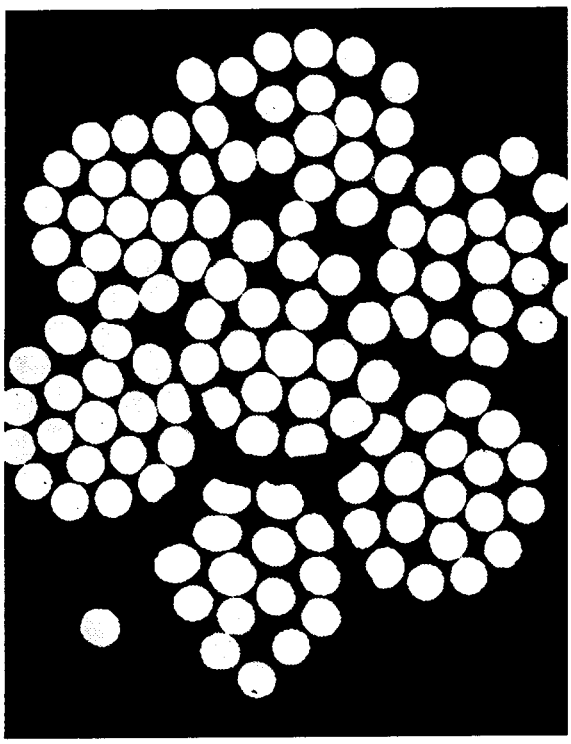

FIGURE 7-19. Internal end view of cable wear.

wool or solvents to clean installed cables. Use of metallic wool will embed dissimilar metal particles in the cables and create further corrosion problems. Solvents will remove internal cable lubricant allowing cable strands to abrade and further corrode. After thorough cleaning, sparingly apply specification MIL-C-16173, grade 4, corrosion-preventive compound to cable. Do not apply the material so thick that it will interfere with the operation of cables at fair-leads, pulleys, or grooved bellcrank areas.

j. Examine cable runs for incorrect routing, fraying, twisting, or wear at fair-leads, pulleys, antiabrasion strips, and guards. Look for interference with adjacent structure, equipment, wiring, plumbing, and other controls. Inspect cable systems for binding, full travel, and security of attaching hardware. Check for slack in the cable system by attempting to move the control column and/or pedals while the gust locks are installed on the control surfaces. With the gust locks removed, actuate the controls and check for friction or hard movement. These are indications that excessive cable tension exists.

NOTE: If the control movement is stiff after maintenance is performed on control surfaces, check for parallel cables twisted around each other, or cables connected in reverse.

k. Check swaged terminal reference marks for an indication of cable slippage within the fitting. Inspect the fitting assembly for distortion and/or broken strands at the terminal. Ensure that all bearings and swivel fittings (bolted or pinned) pivot freely to prevent binding and subsequent failure. Check turnbuckles for proper thread exposure and broken or missing safety wires/clips.

l. Inspect pulleys for roughness, sharp edges, and presence of foreign material embedded in the grooves. Examine pulley bearings to ensure proper lubrication, smooth rotation; and freedom from flat spots, dirt, and paint spray. During the inspection, rotate the pulleys, which only turn through a small arc, to provide a new bearing surface for the cable. Maintain pulley alignment to prevent the cable from riding on the flanges and chafing against guards, covers, or adjacent structure. Check all pulley brackets and guards for damage, alignment, and security.

m. Various cable system malfunctions may be detected by analyzing pulley conditions. These include such discrepancies as too much tension, misalignment, pulley bearing problems, and size mismatches between cables and pulleys. Examples of these condition are shown in figure 7-20.

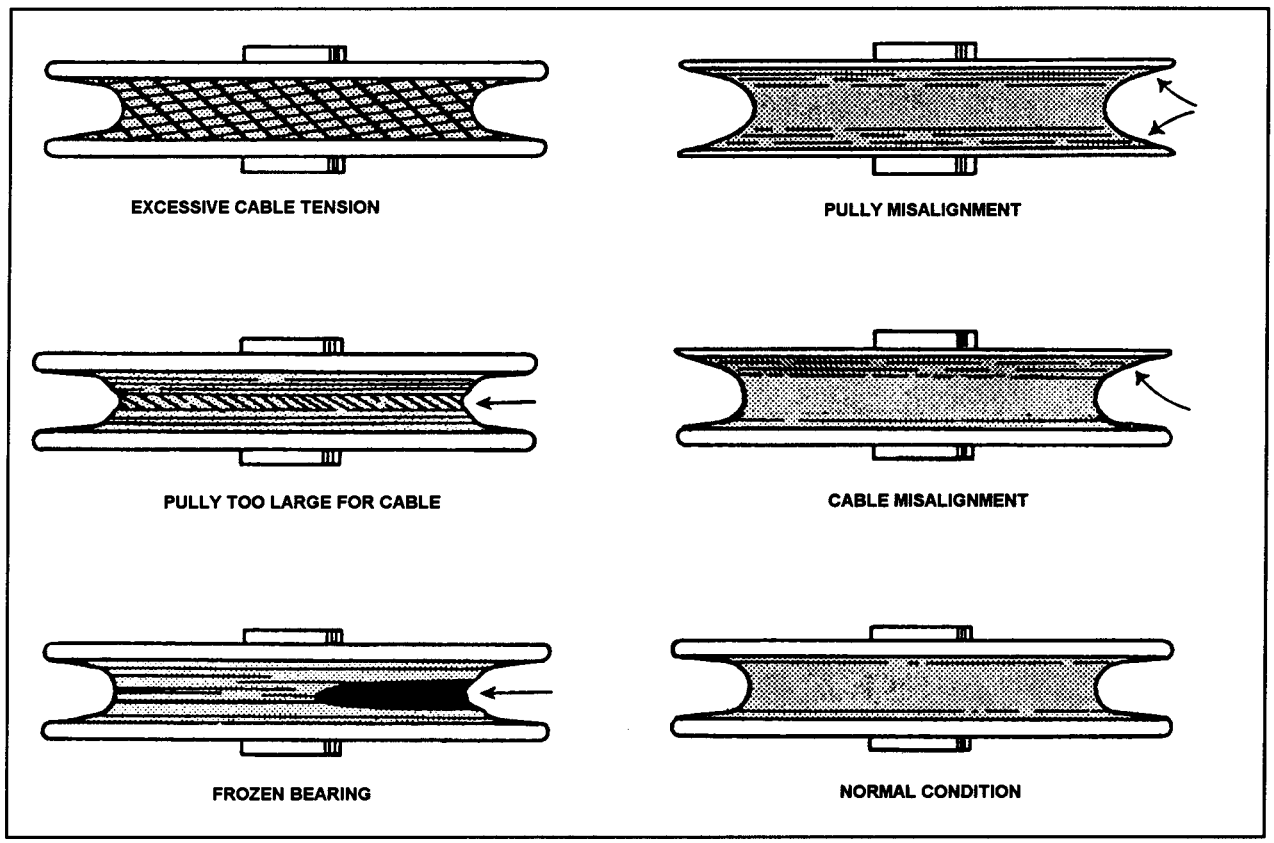

FIGURE 7-20. Pulley wear patterns.

n. Inspect fair-leads for wear, breakage, alignment, cleanliness, and security. Examine cable routing at fair-leads to ensure that defection angles are no greater than 3°□maximum. Determine that all guides and anti-abrasion strips are secure and in good condition.

o. Examine pressure seals for wear and/or material deterioration. Seal guards should be positioned to prevent jamming of a pulley in case pressure seal fails and pieces slide along the cable.

7-150. CORROSION AND RUST PREVENTION. To ensure a satisfactory service life for aircraft control cables, use a cable lubricant to reduce internal friction and prevent corrosion.

a. If the cable is made from tinned steel, coat the cable with rust-preventive oil, and wipe off any excess. It should be noted that corrosion-resistant steel cable does not require this treatment for rust prevention.

b. Lubrication and corrosion preventive treatment of carbon steel cables may be effected simultaneously by application of compound MIL-C-16173, grade 4, or MIL-C-11796, Class I. MIL-C-16173 compound should be brushed, sprayed, or wiped on the cable to the extent it penetrates into the strands and adequately covers the cable surfaces. It will dry "tack free" in 24 hours at 77 °F. MIL-C-11796 compound is applied by dipping the cable for 1/2 minute into a tank of compound heated to 77 ° ± 5 °C (170 ° ± 9 °F) for 1/2 minute then removing it and wiping off the excess oil. (An example of cable corrosion, attributable to battery acid, is shown in figure 7-21.)

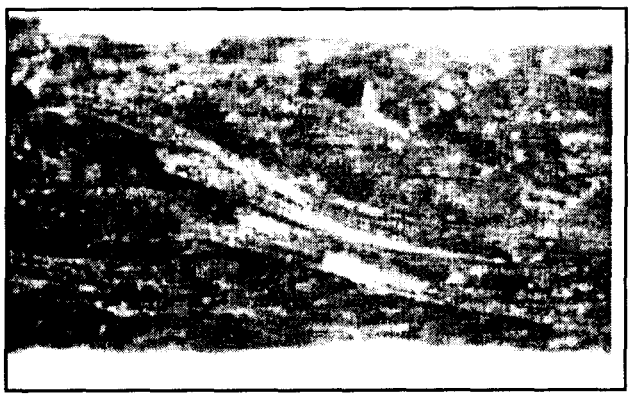

FIGURE 7-21. Corrosion.

7-151. WIRE SPLICES. Standard manufacturing splices have been mistaken for defects in the cable because individual wire end splices were visible after assembly of a finished cable length. In some instances, the process of twisting outer strands around the core strand may also slightly flatten individual outer wires, particularly in the area of a wire splice. This flattening is the result of die-sizing the cable, and does not affect the strength of the cable. These conditions (as shown in figure 7-22) are normal, and are not a cause for cable rejection.

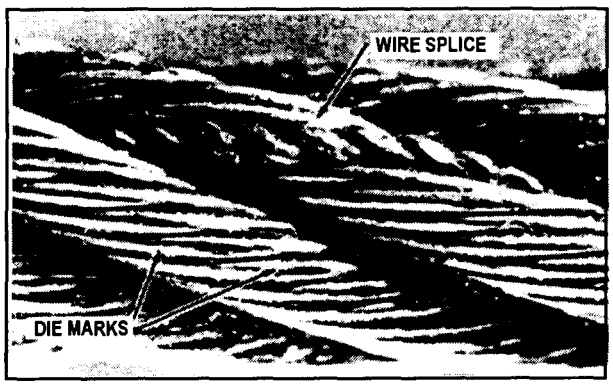

FIGURE 7-22. Manufacturer's wire splice.

7-152. CABLE MAINTENANCE. Frequent inspections and preservation measures such as rust-prevention treatments for bare carbon steel cable areas, will help to extend cable service life. Where cables pass through fair-leads, pressure seals, or over pulleys, remove accumulated heavy coatings of corrosion-prevention compound. Provide corrosion protection for these cable sections by lubricating with a light coat of grease or general-purpose, low-temperature oil.

7-153. CABLE TENSION ADJUSTMENT. Carefully adjust, control cable tension in accordance with the airframe manufacturer's recommendations. On large aircraft, take the temperature of the immediate area into consideration when using a tension meter. For long cable sections, use the average of two or three temperature readings to obtain accurate tension values. If necessary, compensate for extreme surface temperature variations that may be encountered if the aircraft is operated primarily in unusual geographic or climatic conditions such as arctic, arid, or tropic locations. Use rigging pins and gust locks, as necessary, to ensure satisfactory results. At the completion of rigging operations, check turnbuckle adjustment and safetying in accordance with section 10 of this chapter.

7-154.—7-164. [RESERVED.]

a. Differential Compression Test. The most common type of compression tester currently in use is the differential pressure-type tester. It provides a cross-reference to validate the readings obtained and tends to assure that the cylinder is defective before it is removed. Before beginning a compression test, consider the following points:

(1) When the spark plugs are removed from the engine, identify them to coincide with the cylinder and location from which they were removed. Close examination of the plugs will reveal the actual operating conditions and aid in diagnosing problems within each individual cylinder.

(2) The operating and maintenance records of the engine should be reviewed. Records of previous compression tests are of assistance in determining progressive wear conditions and help to establish the necessary maintenance corrective actions.

b. Differential Pressure Compression Test. The differential pressure tester is designed to check the compression of aircraft engines by measuring the leakage through the cylinders caused by worn or damaged components. The operation of the compression tester is based on the principle that, for any given airflow through a fixed orifice, a constant pressure drop across that orifice will result. The restrictor orifice dimensions in the differential pressure tester should be sized for the particular engine as follows:

(1) For an engine cylinder having less than a 5.00-inch bore; 0.040-inch orifice diameter; .250 inch long; and a 60-degree approach angle.

(2) For an engine cylinder with 5.00 inch bore and over: 0.060 inch orifice diameter, .250 inch long, 60 degree approach angle.

(3) A typical schematic diagram of the differential pressure tester is shown in figure 8-1.

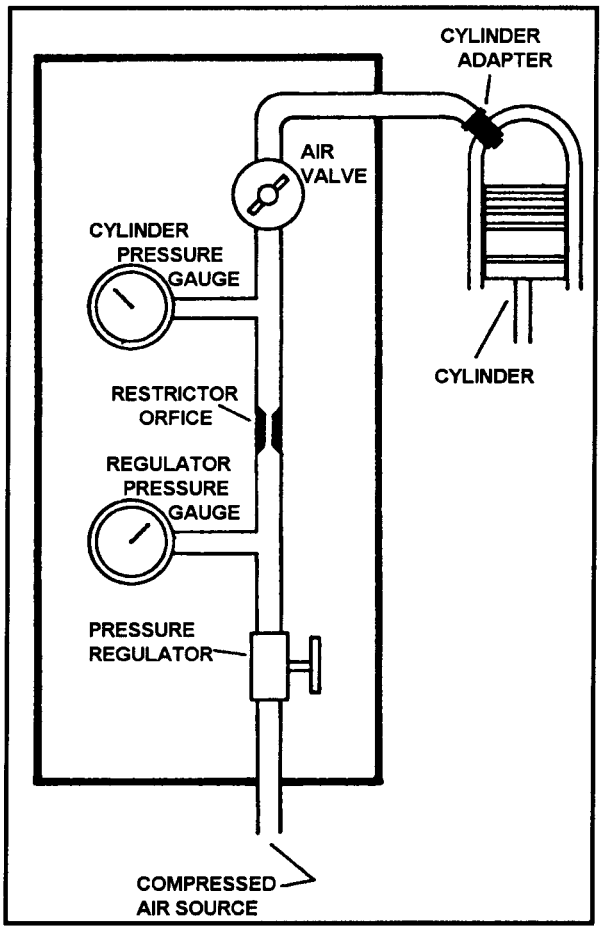

FIGURE 8-1. Schematic of differential pressure compression tester.

(4) As the regulated air pressure is applied to one side of the restrictor orifice with the air valve closed, there will be no leakage on the other side of the orifice and both pressure gauges will read the same. However, when the air valve is opened and leakage through the cylinder increases, the cylinder pressure gauge will record a proportionally lower reading.

(5) While performing the check the following procedures are listed to outline the principles involved, and are intended to supplement the manufacturer's instructions for the particular tester being used.

(a) Perform the compression test as soon as possible after the engine is shut down to ensure that the piston rings, cylinder walls, and other engine parts are well-lubricated.

(b) Remove the most accessible spark plug from each cylinder.

(c) With the air valve closed, apply an external source of clean air (approximately 100 to 120 psi) to the tester.

(d) Install an adapter in the spark plug bushing and connect the compression tester to the cylinder.

(e) Adjust the pressure regulator to obtain a reading of 20 psi on the regulator pressure gauge. At this time, the cylinder pressure gauge should also register 20 psi.

(f) Turn the crankshaft, by hand, in the direction of rotation until the piston (in the cylinder being checked) is coming up on its compression stroke. Slowly open the air valve and pressurize the cylinder to 80 psi.

CAUTION: Care must be exercised in opening the air valve since sufficient air pressure will have built up in the cylinder to cause it to rapidly rotate the propeller if the piston is not at top dead center (TDC).

(g) Continue rotating the engine against this pressure until the piston reaches TDC. Reaching TDC is indicated by a flat spot or sudden decrease in force required to turn the crankshaft. If the crankshaft is rotated too far, back up at least one-half revolution and start over again to eliminate the effect of backlash in the valve operating mechanism and to keep piston rings seated on the lower ring lands.

(h) Open the air valve completely. Check the regulated pressure and readjust, if necessary, to read 80 psi.

(i) Observe the pressure indication of the cylinder pressure gauge. The difference between this pressure and the pressure shown by the regulator pressure gauge is the amount of leakage through the cylinder. A loss in excess of 25 percent of the input air pressure is cause to suspect the cylinder of being defective; however, recheck the readings after operating the engine for at least 3 minutes to allow for sealing of the rings with oil.

(j) If leakage is still occurring after a recheck, it may be possible to correct a low reading. This is accomplished by placing a fiber drift on the rocker arm directly over the valve stem and tapping the drift several times with a hammer to dislodge any foreign material between the valve face and seat.

NOTE: When correcting a low reading in this manner, rotate the propeller so the piston will not be at TDC. This is necessary to prevent the valve from striking the top of the piston in some engines. Rotate the engine before rechecking compression to reseat the valves in the normal manner.

8-15. SPARK PLUGS. The spark plug provides the high-voltage electrical spark to ignite the fuel/air mixture in the cylinder. The types of spark plugs used in different engines will vary with regard to heat range, reach, thread size, and other characteristics required by the particular installation.

a. Heat Range. The heat range of a spark plug is the principal factor governing aircraft performance under various service conditions. The term "heat range" refers to the

material is conductive and will short out the plug. If desired, the use of anti-seize compound may be eliminated on engines equipped with stainless steel spark plug bushings or inserts.

(5) Screw the plug into the cylinder head as far as possible by hand. If the plug will not turn easily to within two or three threads of the gasket, it may be necessary to clean the threads.

NOTE: Cleaning inserts with a tap is not recommended as permanent damage to the insert may result.

(6) Seat the proper socket securely on the spark plug and tighten to the torque limit specified by the engine manufacturer before proceeding to the next plug.

CAUTION: A loose spark plug will not transfer heat properly, and during engine operation, may overheat to the point the nose ceramic will become a "hot spot" and cause pre-ignition. However, avoid over-tightening as damage to the plug and bushing may result.

(7) Connect the ignition lead after wiping clean with a dry, lint-free cloth. Insert the terminal assembly into the spark plug in a straight line. (Care should be taken as improper techniques can damage the terminal sleeves.) Screw the connector nut into place until finger tight, then tighten an additional one quarter turn while holding the elbow in the proper position.

(8) Perform an engine run-up after installing a new set of spark plugs. When the engine has reached normal operating temperatures, check the magnetos and spark plugs in accordance with the manufacturer's instructions.

8-16. OPERATIONAL PROBLEMS.

Whenever problems develop during engine operation, which appear to be caused by the ignition system, it is recommended that the spark plugs and ignition harnesses be checked first before working on the magnetos. The following are the more common spark plug malfunctions and are relatively easy to identify.

a. Fouling.

(1) Carbon fouling (see figure 8-6) is identified by the dull black, sooty deposits on the electrode end of the plug. Although the primary causes are excessive ground idling and rich idle mixtures, a cold heat range may also be a contributing factor.

(2) Lead fouling is characterized by hard, dark, cinder-like globules which gradually fill up the electrode cavity and short out the plug. (See figure 8-6a.) The primary cause for this condition is poor fuel vaporization combined with a high tetraethyl-lead content fuel. A cold heat range may also contribute to this condition.

(3) Oil fouling is identified by a wet, black carbon deposit over the entire firing end of the plug as shown in figure 8-6b. This condition is fairly common on the lower plugs in horizontally-opposed engines, and both plugs in the lower cylinders of radial engines. Oil fouling is normally caused by oil drainage past the piston rings after shutdown. However, when both spark plugs removed from the same cylinder are badly fouled with oil and carbon, some form of engine damage should be suspected, and the cylinder more closely inspected. Mild forms of oil fouling can usually be cleared up by slowly increasing power, while running the engine until the deposits are burned off and the misfiring stops.

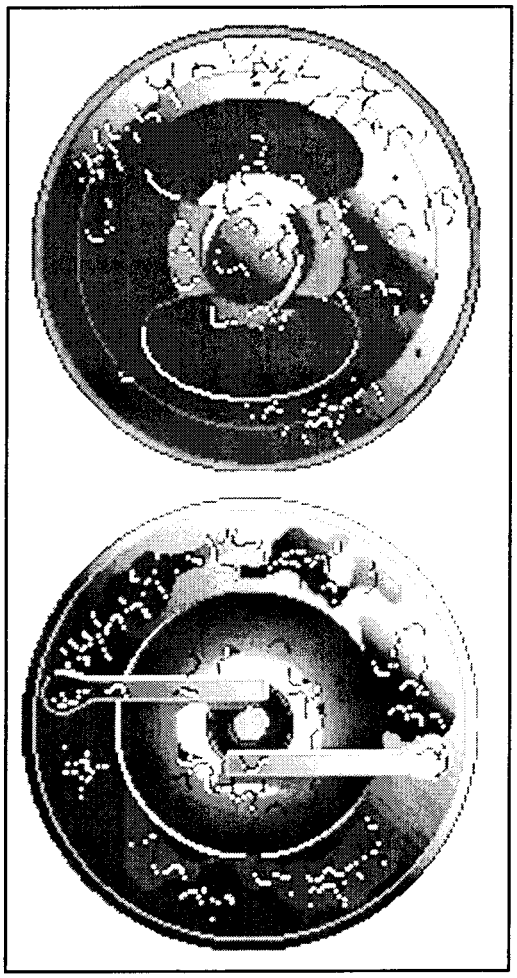

FIGURE 8-6. Typical carbon-fouled spark plug.

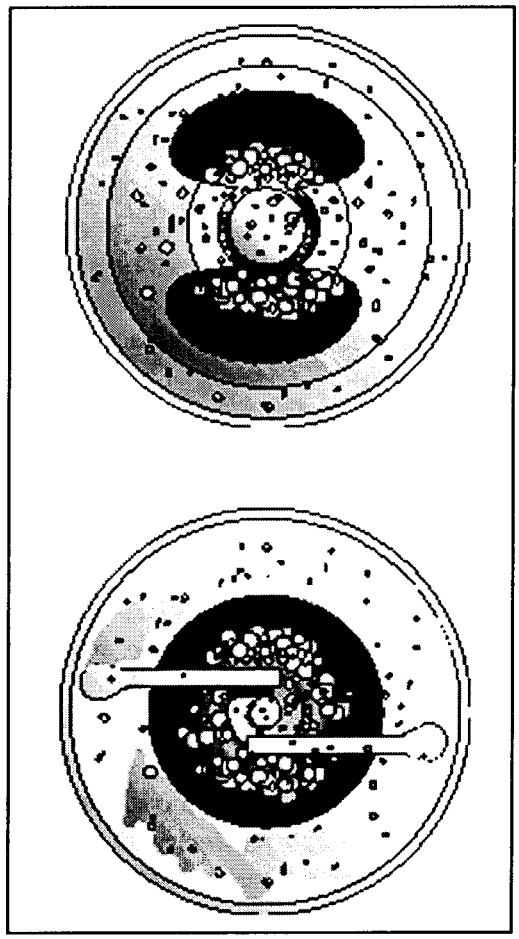

FIGURE 8-6a. Typical lead-fouled spark plug.

b. Fused Electrodes. There are many different types of malfunctions which result in fused spark plug electrodes; however, most are associated with pre-ignition either as the cause or the effect. For this reason, any time a spark plug is found with the following defects, further investigation of the cylinder and piston should be conducted.

(1) Occasionally, the ceramic nose core will crack, break away, and remain trapped behind the ground electrode. This piece of insulation material will then buildup heat to the point it will ignite the fuel/air mixture prematurely. The high temperatures and pressures encountered during this condition can cause damage to the cylinder and piston and ultimately lead to fusing and shorting out of the plug. (See figure 8-6c.)

(2) Corrosive gases formed by combustion and the high voltage spark have eroded the electrodes. Spark plugs in this condition require more voltage to fire—often more than the ignition system can produce. (See figure 8-6d.)

c. Bridged Electrodes. Occasionally, free combustion chamber particles will settle on the electrodes of a spark plug and gradually bridge the electrode gap, resulting in a shorted plug. Small particles may be dislodged by slowly cycling the engine as described for the oil-fouled condition; however, the only remedy for more advanced cases is removal and replacement of the spark plug. This condition is shown in figure 8-6e.

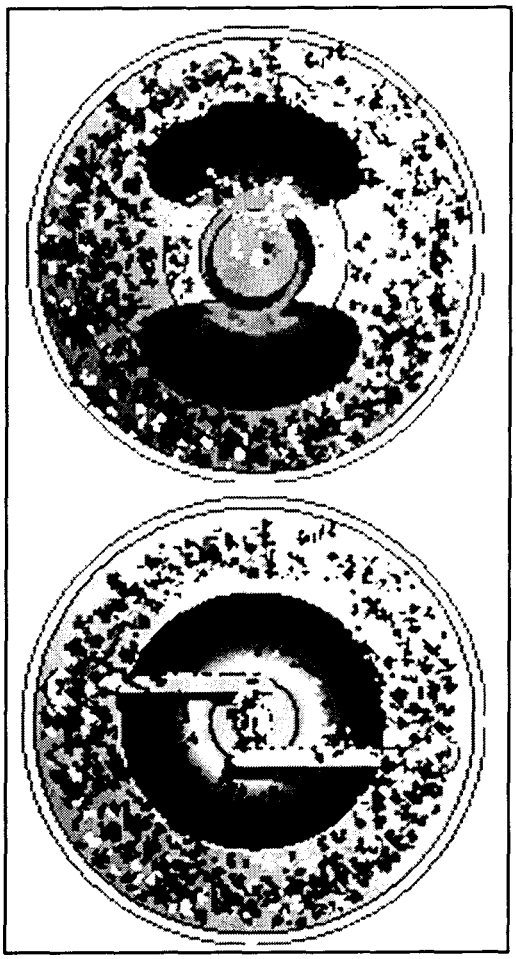

FIGURE 8-6b. Typical oil-fouled spark plug.

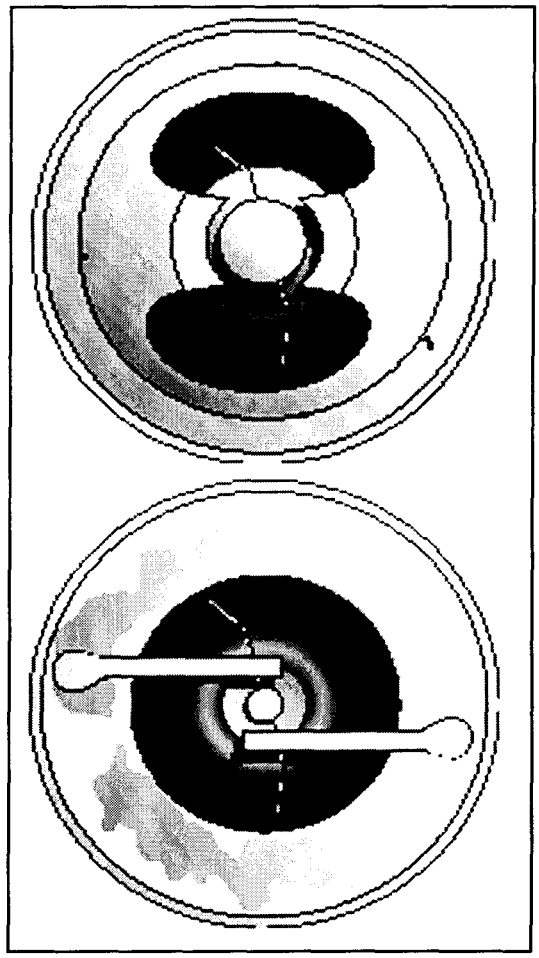

FIGURE 8-6c. Typical spark plug with cracked core nose.

d. Metal Deposits. Whenever metal spray is found on the electrodes of a spark plug, it is an indication that a failure of some part of the engine is in progress. The location of the cylinder in which the spray is found is important in diagnosing the problem, as various types of failures will cause the metal spray to appear differently. For example, if the metal spray is located evenly in every cylinder, the problem will be in the induction system, such as an impeller failure. If the metal spray is found only on the spark plugs in one cylinder, the problem is isolated to that cylinder and will generally be a piston failure.

In view of the secondary damage which occurs whenever an engine part fails, any preliminary indication such as metal spray should be thoroughly investigated to establish and correct the cause.

e. Flashover. It is important that spark plug terminal contact springs and moisture seals be checked regularly for condition and cleanliness to prevent "flashover" in the connector well. Foreign matter or moisture in the terminal connector well can reduce the insulation value of the connector to the point the ignition system voltages at higher power settings may flash over the connector well surface to ground and cause the plug to misfire. If moisture is the cause, hard starting can also result. The cutaway spark plug shown in figure 8-7 illustrates this malfunction. Any spark plug found with a dirty connector well may have this condition, and should be reconditioned before reuse.

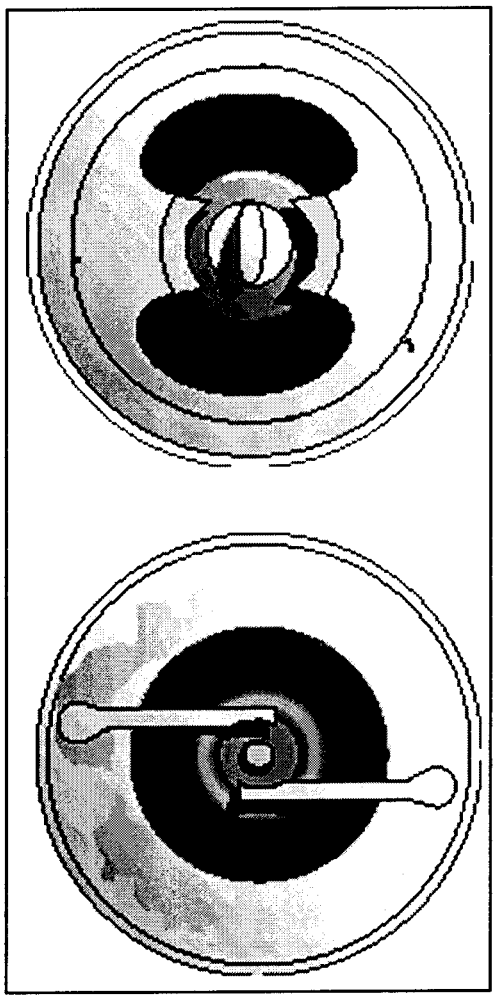

FIGURE 8-6d. Typical worn out spark plug.

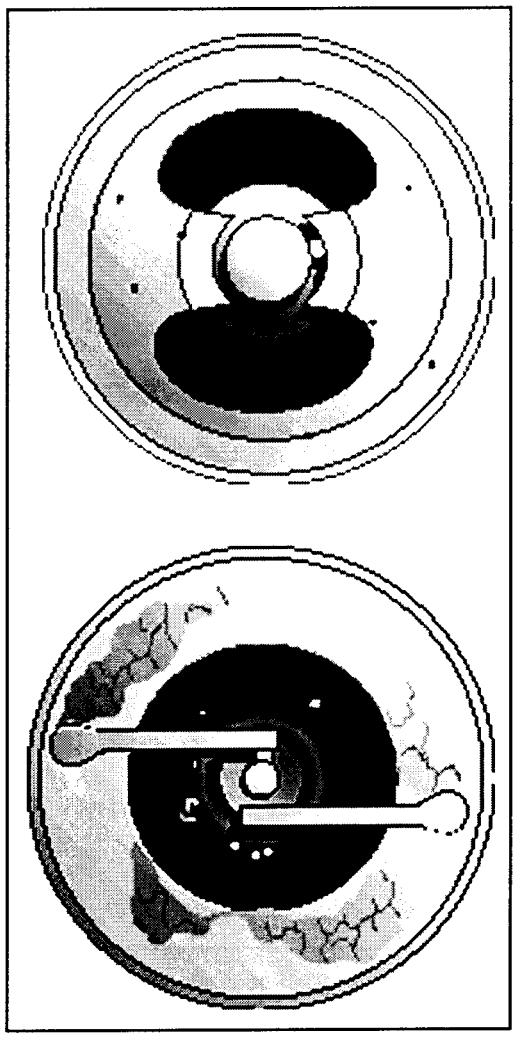

FIGURE 8-6e. Typical spark plug with bridged electrodes.

8-17. SPARK PLUG PRE-RECONDITIONING INSPECTION. All spark plugs should be inspected visually before reconditioning to eliminate any plug with obvious defects. A partial checklist of common defects includes:

a. Chipped or cracked ceramic either at the nose core or in the connector well.

b. Damaged or badly worn electrodes.

c. Badly nicked, damaged, or corroded threads on shell or shielding barrel.

d. Dented, bent, or cracked shielding barrel.

e. Connector seat at the top of the shielding barrel badly nicked or corroded.

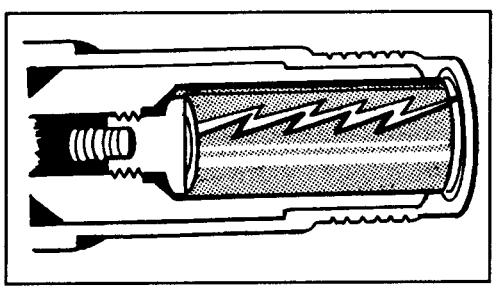

FIGURE 8-7. Spark plug well flashover.

8-18. IGNITION HARNESSES INSPECTION. Aircraft-quality ignition harness is usually made of either medium or high-temperature wire. The type used will depend upon the manufacturing specification for the particular engine. In addition to the applicable manufacturer's maintenance and repair procedures, the following is a quick-reference

checklist for isolating some of the malfunctions inherent to ignition harnesses.

a. Carefully inspect the lead conduit or shielding. A few broken strands will not affect serviceability, but if the insulation in general looks worn, replace the lead.

b. When replacing a lead, if the dressing procedure is not accomplished properly, strands of shielding may be forced through the conductor insulation. If this occurs, a short will exist in the conductor; therefore, it is essential this task be performed properly.

c. The high-temperature coating used on some lightweight harnesses is provided for vibration abrasion resistance and moisture protection. Slight flaking or peeling of this coating is not serious, and a harness assembly need not be removed from service because of this condition.

d. Check the spark plug contact springs for breaks, corrosion, or deformation. If possible, check the lead continuity from the distributor block to the contact spring.

e. Check the insulators at the spark plug end of the lead for cracks, breaks, or evidence of old age. Make sure they are clean.

f. Check to see that the leads are positioned as far away from the exhaust manifold as possible and are supported to prevent any whipping action.

g. When lightweight harnesses are used and the conduit enters the spark plug at a severe angle, use clamps as shown in figure 8-8 to prevent overstressing the lead.

8-19. MAGNETO INSPECTION. Whenever ignition problems develop and it is determined that the magneto is the cause of the difficulty, the following are a few simple inspection procedures which may locate the malfunction quickly. However, conduct any internal inspection or repair of a magneto in accordance with the manufacturer's maintenance and overhaul manuals.

a. Inspect the distributor block contact springs. If broken or corroded, replace.

b. Inspect the felt oil washer, if applicable. It should be saturated with oil. If it is dry, check for a worn bushing.

c. Inspect the distributor block for cracks or a burned area. The wax coating on the block should not be removed. Do not use any solvents for cleaning.

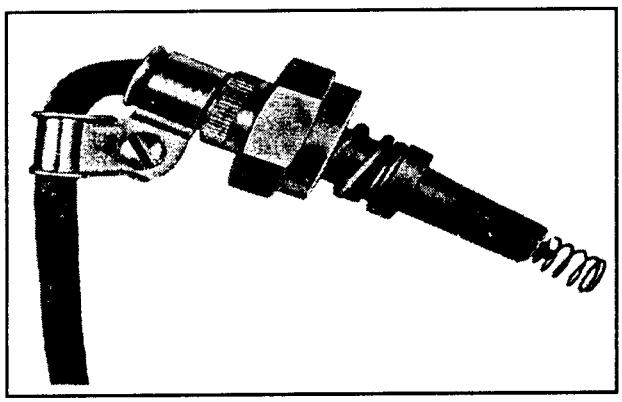

FIGURE 8-8. Typical method of clamping leads.

d. Look for excess oil in the breaker compartment. If oil is present, it may indicate a bad oil seal or bushing at the drive end. This condition could require complete overhaul, as too much oil may foul and cause excessive burning of the contact points.

e. Look for frayed insulation on the leads in the breaker compartment of the magneto. See that all terminals are secure. Be sure that wires are properly positioned.

f. Inspect the capacitor visually for general condition, and check the mounting bracket for cracks or looseness. If possible, check the capacitor for leakage, capacity, and series resistance.

g. Examine the points for excessive wear or burning. Discard points which have deep pits or excessively burned areas. Desired contact surfaces have a dull gray, sandblasted (almost rough) or frosted appearance over the area where electrical contact is made. Figure 8-9 shows how the normal contact point will look when surfaces are separated for inspection. Minor irregularities or roughness of point surfaces are not harmful (see figure 8-10), neither are small pits or mounds, if not too pronounced. If there is a possibility of the pit becoming deep enough to penetrate the pad (see figure 8-11), reject the contact assembly.

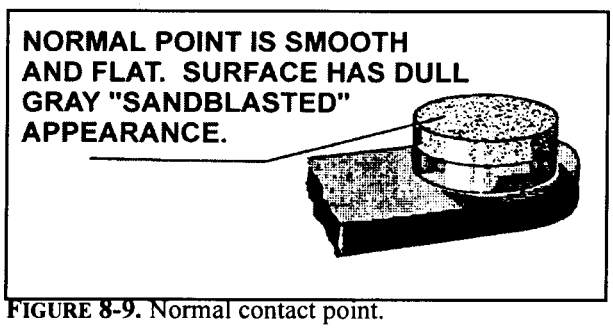

FIGURE 8-9. Normal contact point.

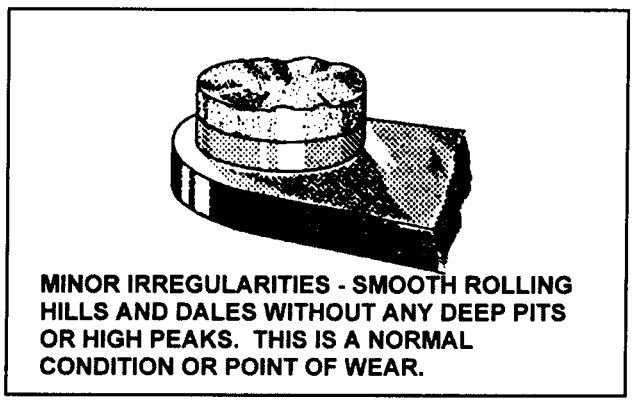

FIGURE 8-10. Point with minor irregularities.

h. Generally, no attempt should be made to dress or stone contact point assemblies; however, if provided, procedures and limits contained in the manufacturer's manuals may be followed.

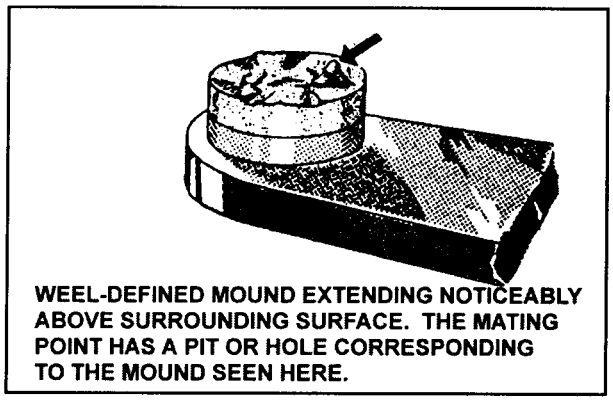

FIGURE 8-11. Point with well-defined mound.

CAUTION: When inspecting the contact points for condition, do not open further than absolutely necessary. Excess tension on the spring will weaken it and adversely affect the performance of the magneto.

i. Adjustment of magneto point gaps must be correct for proper internal timing of a magneto. See applicable manufacturer's publications for internal timing procedures.

j. Check the breaker cam to assure cleanness and smoothness. Check the cam screw for tightness. If new points have been installed, blot a little oil on the cam. In addition, check contact point assembly to ascertain that the cam follower is securely fastened.

k. If the impulse coupling is accessible, inspect for excessive wear on the contact edges of the body and flyweights. In addition, check the flyweights for looseness on the axles.

l. Further examination of the impulse coupling body may disclose cracks caused by exceedingly-tight flyweight axle rivets.

m. Check the magneto ventilators for proper functioning and obstructions. If drilled plugs are used, they should be in the lowest vent hole of the magneto to serve as a drain for condensation and oil.

SECTION 4. REPAIR OF METAL PROPELLERS

8-71. GENERAL. Reject damaged blades with model numbers which are on the manufacturer's list of blades that cannot be repaired. Follow the propeller manufacturer's recommendations in all cases, and make repairs in accordance with latest techniques and best industry practices.

NOTE: Title 14 of the Code of Federal Regulations, 14 CFR, part 65 does not allow an airframe and power plant mechanic to perform major repairs to propellers.

8-72. STEEL BLADES. Due to the critical effects of surface injuries and their repair on the fatigue life of steel blades, all repairs must be made in accordance with the manufacturer's instructions.

8-73. ALUMINUM PROPELLER REPAIRS. Aluminum-alloy propellers and blades with dents, cuts, scars, scratches, nicks, leading-edge pitting, etc., may be repaired, provided the removal or treatment does not materially affect the strength, weight, or performance of the blade. Remove these damages or otherwise treat as explained below, unless it is contrary to the manufacturer's instructions or recommendations. More than one injury is not sufficient cause alone for rejection of a blade. A reasonable number of repairs per blade may be made and not necessarily result in a dangerous condition, unless their location with respect to each other is such to form a continuous line of repairs that would materially weaken the blade. Suitable sandpaper or fine-cut files may be used for removing the necessary amount of metal. In each case, the area involved will be smoothly finished with #00 sandpaper or crocus cloth, and each blade from which any appreciable amount of metal has been removed will be properly balanced before it is used. Etch all repairs. To avoid removal of an excessive amount of metal, local etching should be accomplished at intervals during the process of removing suspected scratches. Upon completion of the repair, carefully inspect the entire blade by etching or anodizing. Remove all effects of the etching process with fine emery paper. Blades identified by the manufacturer as being cold-worked (shot-blasted or cold-rolled) may require peening after repair. Accomplish repair and peening operations on this type of blade in accordance with the manufacturer's instructions. However, it is not permissible in any case to peen down the edges of any injury wherein the operation will lap metal over the injury.

a. Flaws in Edges. Round out nicks, scars, cuts, etc., occurring on the leading edge of aluminum-alloy blades as shown in figure 8-24 (view B). Blades that have the leading edges pitted from normal wear in service may be reworked by removing sufficient material to eliminate the pitting. In this case, remove the metal by starting a sufficient distance from the edge, as shown in figure 8-25, and working forward over the edge in such a way that the contour will remain substantially the same, avoiding abrupt changes in contour. Trailing edges of blades may be treated in substantially the same manner. On the thrust and camber face of blades, remove the metal around any dents, cuts, scars, scratches, nicks, and pits to form shallow saucer-shaped depressions as shown in figure 8-24 (view C). Exercise care to remove the deepest point of the injury and also remove any raised metal around the edges of the injury as shown in figure 8-24 (view A). When repairing blades, figures 8-26 and 8-27 show the maximum reduction in width and thickness that is allowable below the minimum dimensions required by the blade drawing and blade manufacturing specification. Beyond the 90

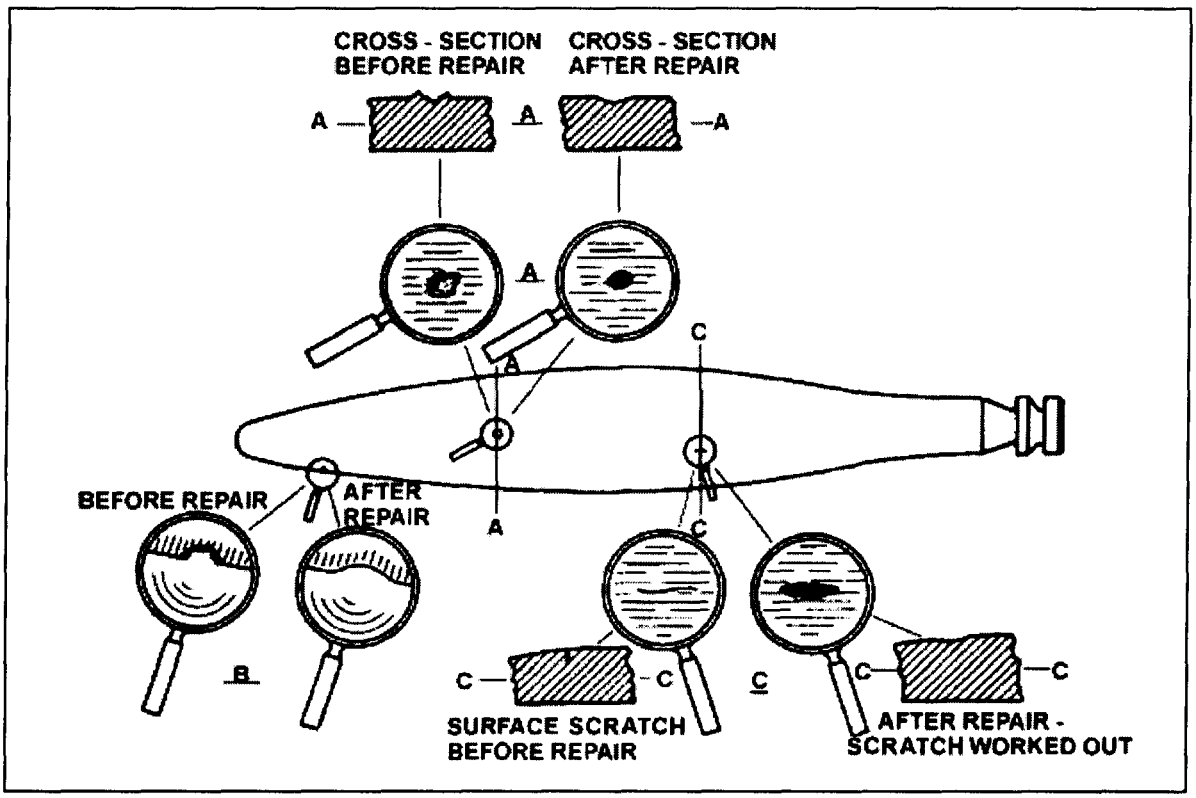

FIGURE 8-24. Method of repairing surface scratches, nicks, etc., on aluminum-alloy propellers.

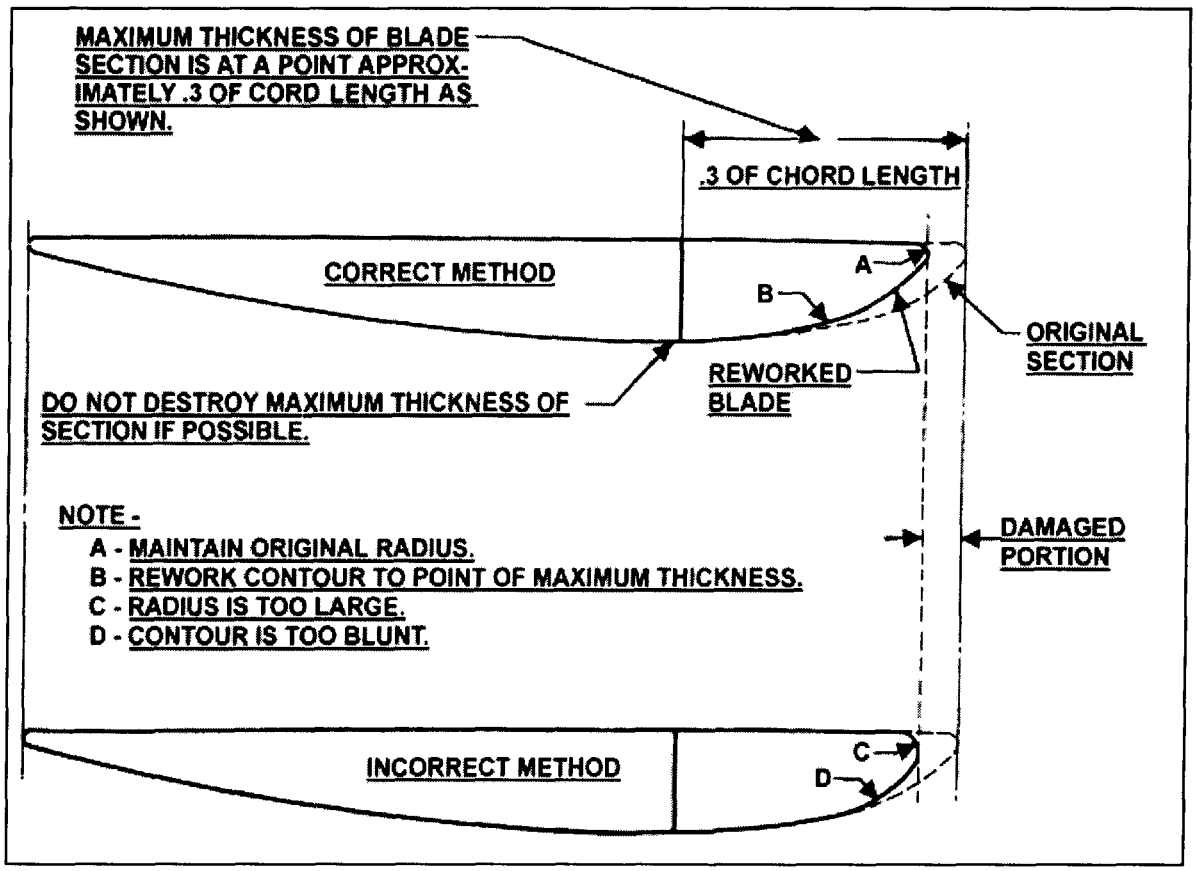

FIGURE 8-25. Correct and incorrect method of reworking leading edge of aluminum-alloy propellers.

CHAPTER 9. AIRCRAFT SYSTEMS AND COMPONENTS

SECTION 1. INSPECTION AND MAINTENANCE OF LANDING GEAR

9-1. GENERAL.

a. The landing gear on aircraft may be fixed or retractable. A fixed gear may be wheels, floats, or skis; and for amphibians a combination of floats and wheels.

b. Retractable gear on aircraft is usually operated with hydraulic or electric power, although some models of light general aviation aircraft have manual retract systems operated by a lever in the cockpit.

(1) In addition to the normal operating system, emergency systems are usually provided to ensure that the landing gear can be lowered in case of main-system failure.

(2) Emergency systems consist of backup hydraulic systems, or stored nitrogen gas bottles that can be directed into actuating cylinders, mechanical systems that can be operated manually, or free-fall gravity systems.

9-2. GENERAL INSPECTION. A thorough inspection of the landing gear involves the entire structure of the gear, including attachments, struts, wheels, brakes, actuating mechanisms for retractable gears, gear hydraulic system and valves, gear doors, and all associated parts. The manufacturer's inspection procedures should be followed where applicable.

9-3. CLEANING AND LUBRICATING. It is recommended that only easily removable neutral solutions be used when cleaning landing gear components. Any advantage, such as speed or effectiveness, gained by using cleaners containing corrosive materials, can be quickly counteracted if these materials become trapped in close-fitting surfaces and crevices.

Wear points, such as landing gear up-and-down latches, jack-screws, door hinges, pulleys, cables, bellcranks, and all pressure-type grease fittings, should be lubricated after every cleaning operation.

To prevent possible failure of a component due to incompatibility or breakdown of the grease, the following should be observed:

1. Use only greases approved for use by the product manufacturer.
2. Never mix different kinds of grease without approval from the product manufacturer.
3. Follow the manufacturer's instructions or FAA approved process for cleaning, purging, and lubricating of the component.

To obtain proper lubrication of the main support bushings, it may be necessary to jack the aircraft.

NOTE: Any time the aircraft is on jacks, check the landing gear main support bushings for wear. Consult the aircraft manufacturer's overhaul manual for specific wear tolerances.

During winter operation, excess grease may congeal and cause increased loads on the gear retraction system, electric motors, and hydraulic pumps. This condition can lead to component malfunctions; therefore, it is recommended that cleanliness be stressed during and after lubrication.

9-4. FIXED-GEAR INSPECTION. Fixed landing gear should be examined regularly for wear, deterioration, corrosion, alignment, and other factors that may cause failure or unsatisfactory operation. During a 100-hour or an-

nual inspection of the fixed gear, the aircraft should be jacked up to relieve the aircraft weight. The gear struts and wheels should be checked for abnormal play and corrected.

a. Old aircraft landing gear that employs a rubber shock (bungee) cord for shock absorption must be inspected for age, fraying of the braided sheath, narrowing (necking) of the cord, and wear at points of contact with the structure and stretch. If the age of the shock cord is near 5 years or more, it is advisable to replace it with a new cord. A cord that shows other defects should be replaced, regardless of age.

b. The cord is color-coded to indicate when it was manufactured and to determine the life of the shock cord. According to MIL-C-5651A, the color code for the year of manufacture is repeated in cycles of 5 years. Table 9-1 shows the color of the code thread for each year and quarter year.

TABLE 9-1. Bungee cord color codes.

YEARS ENDING WITH	COLOR	QUARTER	COLOR
0 or 5	Black	1st	Red
1 or 6	Green	2nd	Blue
2 or 7	Red	3rd	Green
3 or 8	Blue	4th	Yellow
4 or 9	Yellow	1st	Red

c. The color coding is composed of threads interwoven in the cotton sheath that holds the strands of rubber cord together. Two spiral threads are used for the year coding and one thread is used for the quarter of the year sheath, e.g. yellow and blue would indicate that the cord was manufactured in 1994 during April, May, or June.

d. Shock struts of the spring-oleo type should be examined for leakage, smoothness of operation, looseness between the moving parts, and play at the attaching points. The extension of the struts should be checked to make sure that the springs are not worn or broken. The piston section of the strut should be free of nicks, cuts, and rust.

e. Air-oil struts should undergo an inspection similar to that recommended for spring-oleo struts. In addition, the extension of the strut should be checked to see that it conforms to the distance specified by the manufacturer. If an air-oil strut "bottoms"—that is, it is collapsed—the gas charge and hydraulic fluid has been lost from the air chamber. This is probably due to a loose or defective air valve or to defective O-ring seals.

CAUTION: Before an air-oil strut is removed or disassembled, the air valve should be opened to make sure that all air pressure is removed. Severe injury and/or damage can occur as the result of disassembling a strut when even a small amount of air pressure is still in the air chamber.

f. The method for checking the fluid level of an air-oil strut is given in the manufacturer's maintenance manual. An alternate means of servicing an oil strut is to jack up the aircraft, remove the strut's valve cap, release the air charge in the strut by depressing the valve core, remove the strut's valve core, attach a clean two-foot rubber or plastic hose to the threaded portion that houses the valve core, and secure with a hose clamp. Put the other end of the hose into a clean two quart container filled with the correct hydraulic fluid for the strut. Cover the container with a clean rag to prevent spillage. Now, slowly raise the gear/strut assembly either manually or with another jack under the strut. This will drive the remaining air out of the strut into the container of hydraulic fluid. Once the gear is fully retracted, slowly lower the gear. The hydraulic fluid in the can will be sucked into the strut. Repeat this procedure until you cannot hear any more air bubbles in the container when the wheel strut is fully retracted. With the strut

fully retracted, remove the hose, insert the valve core, lower the gear, and service the strut with nitrogen to get the proper strut extension.

g. The entire structure of the landing gear should be closely examined for cracks, nicks, cuts, corrosion damage, or any other condition that can cause stress concentrations and eventual failure. The exposed lower end of the air-oleo piston is especially susceptible to damage and corrosion, which can lead to seal damage, because the strut is compressed and the piston moves past the strut lower seal, causing the seal to leak fluid and air. Small nicks or cuts can be filed and burnished to a smooth contour, eliminating the point of stress concentration. If a crack is found in a landing-gear member, the part must be replaced.

h. All bolts and fittings should be checked for security and condition. Bolts in the torque links and shimmy damper tend to wear and become loose due to the operational loads placed on them. The nose-wheel shimmy damper should be checked for proper operation and any evidence of leaking. All required servicing should be performed in accordance with the aircraft service manual.

9-5. INSPECTION OF RETRACTABLE LANDING GEAR. Inspection of the retractable landing gear should include all applicable items mentioned in the inspection for the fixed gear. In addition, the actuating mechanisms must be inspected for wear looseness in any joint, trunnion, or bearing; leakage of fluid from any hydraulic line or unit; and, smoothness of operation. The operational check is performed by jacking the aircraft according to the manufacturer's instructions and then operating the gear retracting and extending system.

a. During the operational test, the smoothness of operation, effectiveness of up-and-down locks, operation of the warning horn, operation of indicating systems, clearance of tires in wheel wells, and operation of landing-gear doors should be checked. Improper adjustment of sequence valves may cause doors to rub against gear structures or wheels. The manufacturer's checklist should be followed to ensure that critical items are checked. While the aircraft is still on jacks, the gear can be tested for looseness of mounting points, play in torque links, condition of the inner strut cylinder, play in wheel bearings, and play in actuating linkages. Emergency blow down gear bottles should be inspected for damage and corrosion and weighed to see if the bottle is still retaining the charge.

b. Mechanics should be aware that retread tires can be dimensionally bigger than a "new" tire. While this does not pose a problem on fixed landing gear aircraft, it may present a serious problem when installed on retractable landing gear aircraft. It is strongly recommended that if a retread tire is installed on a retractable landing gear aircraft, a retraction test be performed. With the gear in the up-and-lock position, the mechanic should determine that if the tire expands due to high ambient temperature, heat generated from taxi and take-off, repeated landings, or heavy braking, the tire will not expand to the point that it becomes wedged in the wheel well.

c. The proper operation of the anti-retraction system should be checked in accordance with the manufacturer's instructions. Where safety switches are actuated by the torque links, the actual time of switch closing or opening can be checked by removing all air from the strut and then collapsing the strut. In every case, the adjustment should be such that the gear control cannot be placed in the UP position or that the system cannot operate until the shock strut is at the full extended position.

9-6. EMERGENCY SYSTEMS. Exercise emergency landing gear systems periodically to ensure proper operation and to prevent inactivity, dirt, and corrosion from rendering the system inoperative when needed. Most emer-

gency systems employ either mechanical, pressure-bottle, or free-fall extension capabilities. Check for the proper safeties on triggering mechanisms, and for the presence of required placards, and necessary accessories such as cranks, levers, handles, etc. Emergency blow-down bottles should be checked for corrosion damage, and then weighed to see if the bottle is still retaining the charge.

9-7. LANDING GEAR COMPONENTS.

The following items are susceptible to service difficulties and should be inspected.

a. Shock Absorbers. Inspect the entire shock-strut for evidence of leaks, cracks, and possible bottoming of the piston, as this condition causes overloading of landing-gear components and contributes to fatigue cracks. Check all bolts, bolt holes, pins, and bushings for condition, lubrication, and proper torque values. Grease fitting holes (pressure-type) are especially vulnerable to cracks and cross-threading damage. Check all safety wire and other locking devices, especially at the main packing gland nuts.

(1) When assembling shock-struts, use the correct type and number of new "O"-rings, Chevron seals, and backup rings. Use only the correct filler valve core assembly, and follow the manufacturer's instructions when servicing with fluid and air. Either too much or too little air or oil will affect aircraft handling characteristics during taxi, takeoff, and landing, and can cause structural overloads.

(2) Shock cords and rubber discs deteriorate with age and exposure. When this type of shock absorber is used, inspect for general condition; i.e., cleanliness, stretching, fraying, and broken strands. These components should be kept free of petroleum products as they accelerate deterioration of the rubber.

b. Nose Gear Assembly. Inspection of the steering mechanism should include torque-links (scissors), torque-tubes, control rods and rod-end bearings, shimmy dampers, cables, and turning stops. In addition, check all nose landing gear components, including mud scrapers and slush deflectors, for damage.

(1) Towing of some aircraft with the rudder locks installed, may cause damage to the steering linkage and rudder control system. Exceeding the steering or towing stop limits should be followed by a close inspection of the entire nose steering assembly. A broken steering stop will allow turning beyond the design limit, transmitting excessive loads to structures, and to the rudder control system. It is recommended that the nose steering arc limits be painted on the steering collar or fuselage.

(2) Inspect shimmy dampers for leakage around the piston shaft and at fluid line connections, and for abnormal wear or looseness around the pivot points. Also check for proper rigging, "bottoming" of the piston in the cylinder, and the condition of the external stops on the steering collar.

c. Tail Wheels. Disassembly, cleaning, and re-rigging of tail wheels are periodically necessary. Inspect them for loose or broken bolts, broken springs, lack of lubrication, and general condition. Check steerable tail wheels for proper steering action, steering-horn wear, clearances, and for security and condition of steering springs and cables.

d. Gear Doors. Inspect gear doors frequently for cracks, deformation, proper rigging, and general condition. Gear door hinges are especially susceptible to progressive cracking, which can ultimately result in complete failure, allowing the door to move and cause possible jamming of the gear. This condition could also result in the loss of the door during flight. In addition, check for proper safetying of the hinge pins and for distorted, sheared, loose, or cracked hinge rivets. Inspect the wheel wells for improper location or rout-

ing of components and related tubing or wiring. This could interfere with the travel of the gear door actuating mechanisms.

e. Wheels. Inspect the wheels periodically for cracks, corrosion, dents, distortion, and faulty bearings in accordance with the manufacturer's service information. In split-type wheels, recondition bolt holes which have become elongated due to some play in the through-bolt, by the use of inserts or other FAA-approved means. Pay particular attention to the condition of the through-bolts and nuts. Carefully inspect the wheels used with tubeless tires for damage to the wheel flange and for proper sealing of the valve. The sealing ring used between the wheel halves should be free of damage and deformation. When bolting wheel halves together, tighten the nuts to the proper torque value. Periodically accomplish an inspection to ensure the nuts are tight and that there is no movement between the two halves of the wheel. Maintain grease retaining felts in the wheel assembly in a soft, absorbent condition. If any have become hardened, wash them with a petroleum-base cleaning agent; if this fails to soften them, they should be replaced.

(1) Corrosion of wheels. Remove all corrosion from the wheel half, and inspect it to ensure that the wheel halves are serviceable. Apply corrosion prevention treatments as applicable. Prime with a zinc chromate primer or equivalent, and apply at least two finish coats.

(2) Dented or distorted wheels. Replace wheels which wobble excessively due to deformation resulting from a severe side-load impact. In questionable cases, consult the local representative of the FAA concerning the airworthiness of the wheels. Minor dents do not affect the serviceability of a wheel.

(3) Wheel bearings. When inspecting wheel bearings for condition, replace damaged or excessively worn parts. Maintain bearings and races as matched sets. Pack bearings only with the grease type called for in the manufacturer's maintenance manual prior to their installation. Avoid pre-loading the wheel bearing when installing it on the aircraft by tightening the axle nut just enough to prevent wheel drag or side play.

f. Brakes. Disassemble and inspect the brakes periodically and examine the parts for wear, cracks, warpage, corrosion, elongated holes, etc. Discolored brake disks are an indication of overheated brakes and should be replaced. If any of these or other faults are indicated, repair, recondition, or replace the affected parts in accordance with the manufacturer's recommendations.

g. Hydraulic Brakes. For proper maintenance, periodically inspect the entire hydraulic system from the reservoir to the brakes. Maintain the fluid at the recommended level with proper brake fluid. When air is present in the brake system, bleed in accordance with the manufacturer's instructions. Replace flexible hydraulic hoses which have deteriorated due to long periods of service and replace hydraulic piston seals when there is evidence of leakage.

h. Micro-Switches. Inspect micro-switches for security of attachment, cleanliness, general condition, and proper operation. Check the associated wiring for chafing, proper routing, and to determine that protective covers are installed on wiring terminals, if required. Check the condition of the rubber dust boots which protect the micro-switch plungers from dirt and corrosion.

9-8. FLOATS AND SKIS. Aircraft operated from water may be provided with either a single float or a double float, depending upon the design and construction; however, if an aircraft is an amphibian, it has a hull for flotation and then may need only wingtip floats.

Amphibious aircraft have floats or a hull for operating on water and retractable wheels for land operation.

a. Skis are used for operating on snow and ice. The skis may be made of wood, metal, or composite materials. There are three basic styles of skis. A conventional ski, shown in figure 9-1, replaces the wheel on the axle. The shock cord is used to hold the toe of the ski up when landing. The safety cable and check cable prevent the ski from pivoting through too great an angle during flight.

b. The wheel ski is designed to mount on the aircraft along with the tire. The ski has a portion cut out that allows the tire to extend slightly below the ski, so that the aircraft can be operated from conventional runways with the wheels or from snow or ice surfaces using the ski. This arrangement has a small wheel mounted on the heel of the ski, so that it does not drag on conventional runways.

c. In retractable wheel-ski arrangements, the ski is mounted on a common axle with the wheel. In this arrangement, the ski can be extended below the level of the wheel for landing on snow or ice. The ski can be retracted above the bottom of the wheel for operations from conventional runways. A hydraulic system is commonly used for the retraction-system operation.

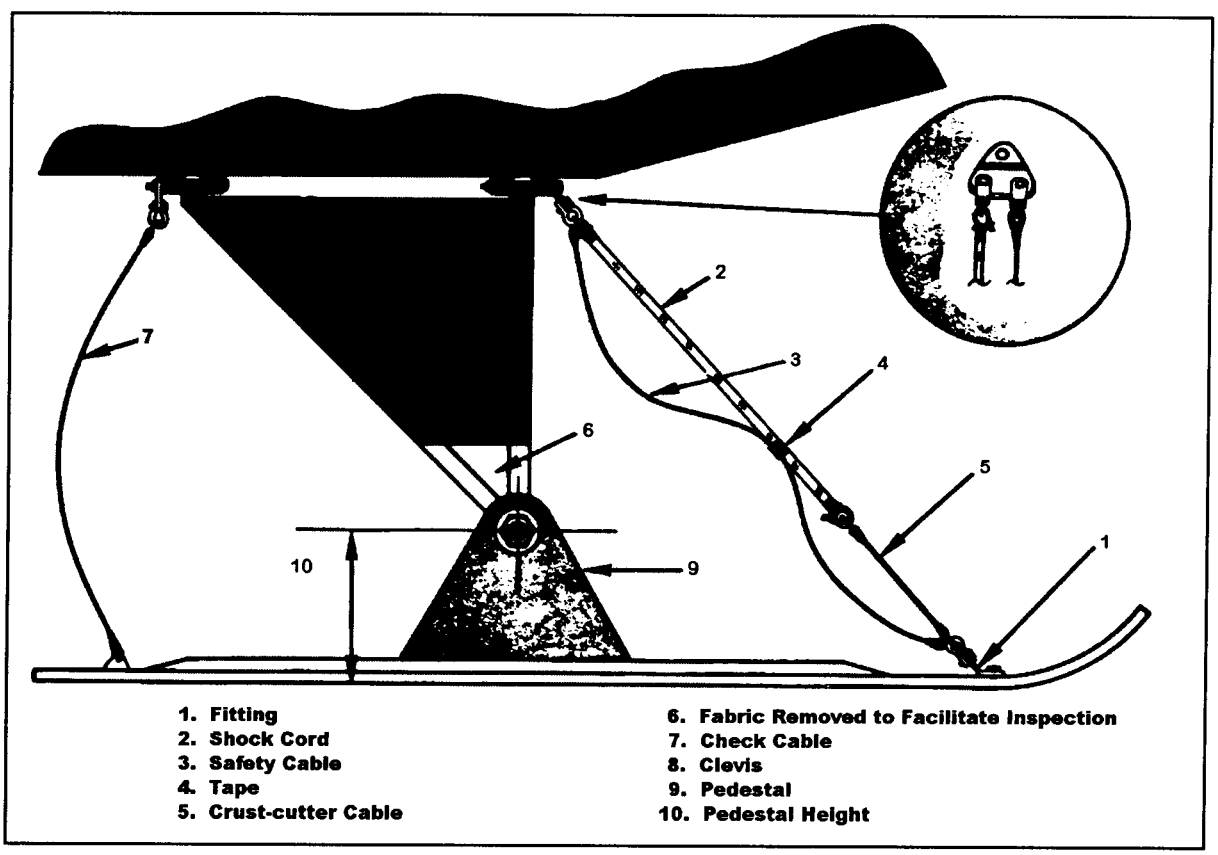

FIGURE 9-1. A typical ski installation.

9-9. INSPECTION AND REPAIR OF FLOATS AND SKIS. Inspection of floats and skis involves examination for damage due to corrosion, collision with other objects, hard landings, and other conditions that may lead to failure. Tubular structures for such gear may be repaired as described in the section covering welded repairs of tubular structures.

a. Floats. To maintain the float in an airworthy condition, periodic and frequent inspections should be made because of the rapidity of corrosion on metal parts, particularly when the aircraft is operated in salt water. Examine metal floats and all metal parts on wooden or fiberglass floats for corrosion, and take corrective action in accordance with the procedures described in Chapter 6, Corrosion, Inspection & Protection. Chapter 4, Metal Structure, Welding, and Brazing, outlines methods for repairing damage to metal floats of aluminum and aluminum alloy structures.

Note: Blind rivets should not be used on floats or amphibian hulls below the water line.

In the case of wooden floats, make repairs in accordance with general procedures outlined in Chapter 1, Wood Structure. Repair fiberglass floats in accordance with the manufacturer's instructions.

(1) If small blisters are noticed on the paint, either inside or outside the float, the paint should be removed and the area examined. If corrosion is found, the area should be cleaned thoroughly, and a coat of corrosion-inhibiting material applied. If the corrosion penetrates the metal to an appreciable depth, replace the metal. Special attention should be given to brace wire fittings and water rudder-control systems.

(2) If the hull or floats have retractable landing gear, a retraction check should be performed along with the other recommendations mentioned for retractable landing-gear systems. Sheet-metal floats should be repaired using approved practices; however, the seams between sections of sheet metal should be waterproofed with suitable fabric and sealing compound. A float that has undergone hull repairs should be tested by filling it with water and allowing it to stand for at least 24 hours to see if any leaks develop.

b. Skis and Ski Installation. Skis should be inspected for general condition of the skis, cables, bungees, and fuselage attachments. If retractable skis are used, checks in accordance with the general practices for retractable gear should be followed. Ski manufacturers usually furnish acceptable repair procedures. It is advisable to examine ski installations frequently to keep them maintained in airworthy condition. If shock cord is used to keep the ski runner in proper trim, periodically examine to ensure that the cord has enough elasticity to keep the runner in its required attitude and the cord is not becoming loose or badly frayed. Replace old or weak shock cords. When other means of restraint are provided, examine for excessive wear and binding, and replace or repair as required. Examine the points of cable attachment, both on the ski and the aircraft structure, for bent lugs due to excessive loads that have been imposed while taxiing over rugged terrain or by trying to break loose frozen skis. If skis that permit attachment to the wheels and tires are used, maintain proper tire pressure as under-inflated tires may push off the wheels if appreciable side loads are developed in landing or taxiing.

c. Repair of Ski Runners. Repair limits are found in the applicable manufacturer's manual. Fractured wooden ski runners usually require replacement. If a split at the rear end of the runner does not exceed 10 percent of the ski length, it may be repaired by attaching one or more wooden crosspieces across the top of

the runner using glue and bolts. Bent or torn metal runners may be straightened if minor bending has taken place and minor tears may be repaired in accordance with procedures recommended in Chapter 4, Metal Structure, Welding, and Brazing.

d. Ski Pedestals.

(1) Tubular Pedestals. Damaged pedestals made of steel tubing may be repaired by using tube splices as shown in the chapter on welding.

(2) Cast Pedestals. Consult a Federal Aviation Administration (FAA) representative on the repair of cast pedestals.

9-10. TYPES OF LANDING GEAR PROBLEMS. During inspection and before removing any accumulated dirt, closely observe the area being inspected while the wingtips are gently rocked up and down. Excessive motion between normally close-fitting landing gear components may indicate wear, cracks, or improper adjustment. If a crack exists, it will generally be indicated by dirt or metallic particles which tend to outline the fault. Seepage of rust inhibiting oils, used to coat internal surfaces of steel tubes, also assists in the early detection of cracks. In addition, a sooty, oily residue around bolts, rivets, and pins is a good indication of looseness or wear.

a. Thoroughly clean and re-inspect the landing gear to determine the extent of any damage or wear. Some components may require removal and complete disassembly for detailed inspection. Others may require a specific check using an inspection process such as dye penetrant, magnetic particle, radiographic, ultrasonic, or eddy current. The frequency, degree of thoroughness, and selection of inspection methods are dependent upon the age, use, and general condition of the landing gear.

b. Inspect the aircraft or landing gear structure surrounding any visible damage to ensure that no secondary damage remains undetected. Forces can be transmitted along the affected member to remote areas where subsequent normal loads can cause failure at a later date.

c. Prime locations for cracks on any landing gear are bolts, bolt holes, pins, rivets, and welds. The following are typical locations where cracks may develop.

d. Most susceptible areas for bolts are at the radius between the head and the shank, and in the location where the threads join the shank, as shown in figure 9-2.

e. Cracks primarily occur at the edge of bolt holes on the surface and down inside the bore. (See figures 9-3 and 9-4.)

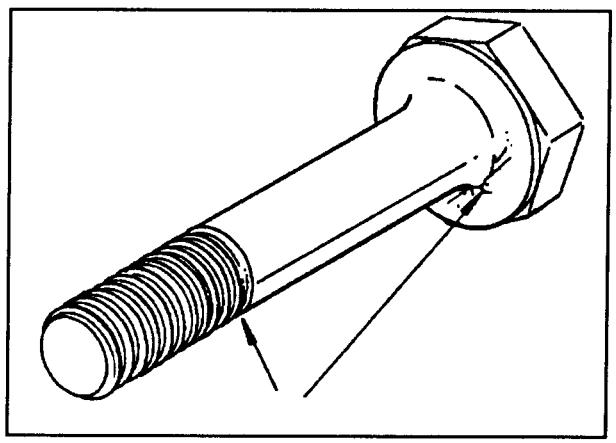

FIGURE 9-2. Typical bolt cracks.

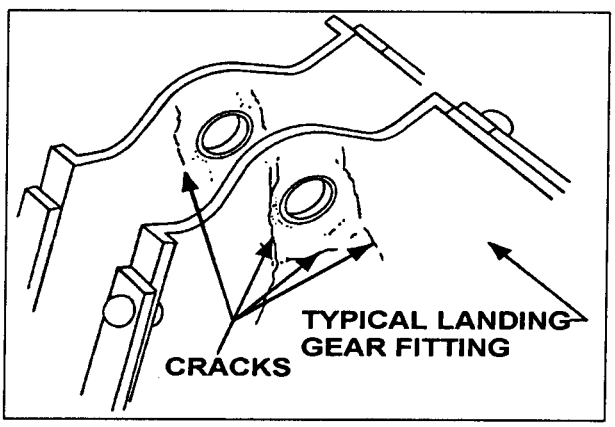

FIGURE 9-3. Typical cracks near bolt holes.

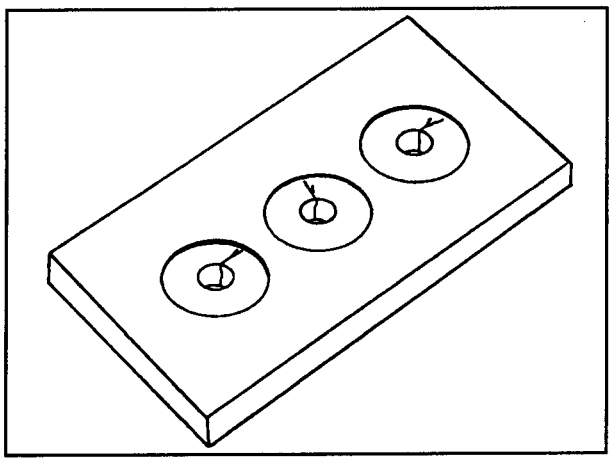

FIGURE 9-4. Typical bolt hole cracks.

f. The usual types of failure in riveted joints or seams are deformation of the rivet heads and skin cracks originating at the rivets' holes.

g. Cracks and subsequent failures of rod ends usually begin at the thread end near the bearing and adjacent to or under the jam nut. (See figure 9-5.)

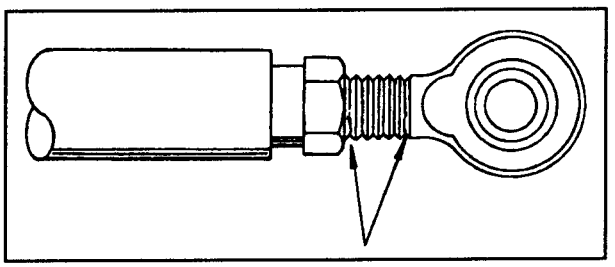

FIGURE 9-5. Typical rod-end cracks.

h. Cracks develop primarily along the edge of the weld adjacent to the base metal and along the centerline of the bead.

i. Elongated holes are especially prevalent in taper-pin holes and bolt holes or at the riveted joints of torque tubes and push-pull rods. (See figure 9-6.)

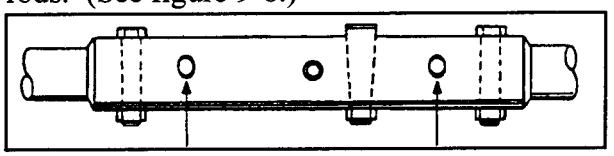

FIGURE 9-6. Typical torque tube bolt hole elongation.

j. Deformation is common in rods and tubes and usually is noticeable as stretched, bulged, or bent sections. Because deformations of this type are difficult to see, feel along the tube for evidence of this discrepancy. Deformation of sheet-metal web sections, at landing-gear component attachment points, usually can be seen when the area is highlighted with oblique lighting.

9-11. SPECIAL INSPECTIONS. When an aircraft experiences a hard or overweight landing, the mechanic should perform a special structural inspection of the aircraft, including the landing gear. Landing gear support trusses should be inspected for cracked welds, sheared bolts and rivets, and buckled structures. Wheels and tires should be inspected for cracks and cuts, and upper and lower wing surfaces should be inspected for wrinkles, deformation, and loose or sheared rivets. If any damage is found, a detailed inspection is recommended.

9-12. RETRACTION TESTS. Periodically perform a complete operational check of the landing gear retraction system. Inspect the normal extension and retraction system, the emergency extension system, and the indicating and emergency warning system. Determine that the actuating cylinders, linkage, slide tubes, sprockets, chain or drive gears, gear doors, and the up-and-down locks are in good condition and properly adjusted and lubricated, and the wheels have adequate clearance in the wheel wells. In addition, an electrical continuity check of micro-switches and associated wiring is recommended. Only qualified personnel should attempt adjustments to the gear position and warning system micro-switches. Follow the manufacturer's recommendations.

9-13. TIRE AND TUBE MAINTENANCE. A program of tire maintenance can minimize tire failures and increase tire service life.

a. Correct balance is important since a heavy spot on an aircraft tire, tube, or wheel assembly is likely to cause that heavy spot to hit the ground first when landing. This results in excessive wear at one spot and an early failure at that part of the tire. A severe case of imbalance causes excessive vibration during take-off and landing, especially at high speed.

b. A protective cover should be placed over a tire while servicing units that might drip fluid on the tire.

9-14. TIRE INSPECTION AND REPAIR. Tires should be inspected frequently for cuts, worn spots, bulges on the side walls, foreign bodies in the treads, and tread condition. Defective or worn tires may be repaired or retreaded. The term, retread, refers to several means of restoring a used tire, whether by applying a new tread alone or tread and side wall material in varying amounts. The following guidelines should be used for tire inspection:

a. Tread Wear. Inspect the tires visually for remaining tread. Tires should be removed when tread has worn to the base of any groove at any spot, or to a minimum depth as specified by the tire or aircraft manufacturer. Tires worn to fabric in the tread area should be removed regardless of the amount of tread remaining.

b. Uneven Wear. If tread wear is excessive on one side, the tire can be dismounted and turned around, providing there is no exposed fabric. Gear misalignment causing this condition should be corrected.

WARNING: Do not probe cuts or embedded foreign objects while tire is inflated.

c. Tread Cuts. Inspect tread for cuts and other foreign object damage, and mark with crayon or chalk. Remove tires that have the following:

(1) Any cuts into the carcass ply.

(2) Cuts extending more than half of the width of a rib and deeper than 50 percent of the remaining groove depth.

(3) Weather checking, cracking, cuts, and snags extending down to the carcass ply in the sidewall and bead areas.

(4) Bulges in any part of tire tread, sidewall, or bead areas that indicate a separation or damaged tire.

(5) Cracking in a groove that exposes fabric or if cracking undercuts tread ribs.

d. Flat Spots. Generally speaking, tires need not be removed because of flat spots due to skid or hydroplane burns unless fabric is exposed. If objectionable unbalance results, remove the tire from service.

e. Beads. Inspect bead areas next to wheel flanges for damage due to excessive heat, especially if brake drag or severe braking has been reported during taxi, takeoff or landing.

f. Tire Clearance. Look for marks on tires, the gear, and in the wheel wells that might indicate rubbing due to inadequate clearance.

g. Surface Condition. The surface condition of a tire can be inspected with the tire on the aircraft. The tread should be checked for abnormal wear. If the tread is worn in the center of the tire but not on the edges, this indicates that the tire is over-inflated and the operational air pressure should be reduced. On the other hand, a tire worn on the edges, but not in the center, indicates under-inflation. These indications are shown in figure 9-7.

9-15. INFLATION OF TIRES. There is serious danger involved with inflating and tire assembly. The tire should not be inflated beyond the recommended pressure (when it is not being installed in a safety cage). Over-inflation can cause damage to the aircraft, as well as personal injury. Under-inflation will cause excessive tire wear and imbalance. The airframe manufacturer's load and pressure chart should be consulted before inflating tires. Sufficiently inflate the tires to seat the tire beads; then deflate them to allow the tube to assume its position. Inflate to the recommended pressure with the tire in a horizontal position.

Tire check of storage aircraft should be done in accordance with the applicable aircraft storage manual.

9-16. PERSONAL SAFETY. When servicing aircraft tires, personnel should stand either in the front or rear of the wheel and avoid approaching from either side of the tire. See illustration below:

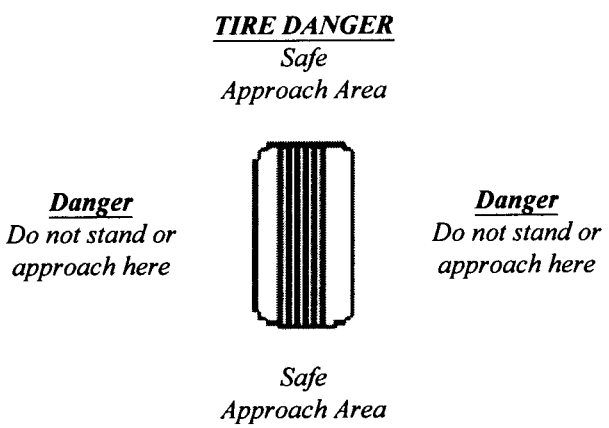

Personnel should wear protective eye gear to reduce the risk of eye injury due to inflation and deflation of tires.

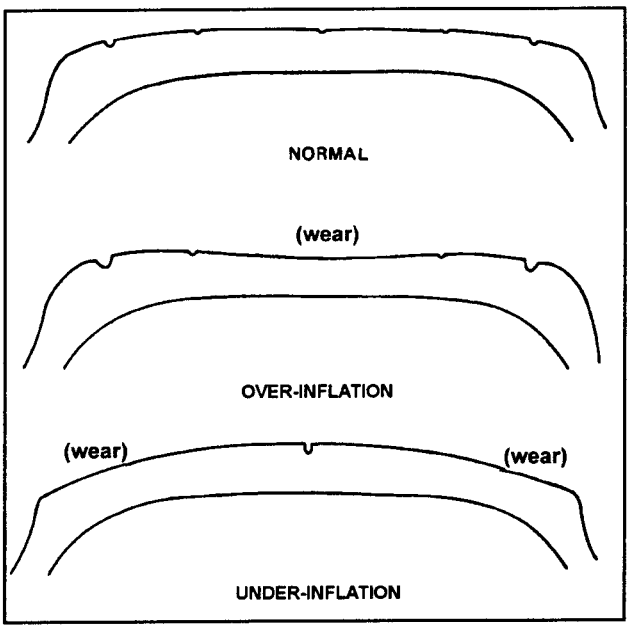

FIGURE 9-7. Examples of tread wear indicating over-inflation and under-inflation.

NOTE: The use of nitrogen to inflate tires is recommended. Do not use oxygen to inflate tires. Deflate tires prior to removing them from the aircraft or when built-up tire assemblies are being shipped.

9-17. DISASSEMBLE THE WHEEL in accordance with aircraft manufacturer's instructions.

Do not attempt to disassemble wheel until the tire has been completely deflated: otherwise serious injury or damage to equipment can result.

Do not attempt to remove valve core until tire has been completely deflated. Valve cores will eject at high velocity if unscrewed before air pressure has been released.

Never attempt to remove wheel bolts or break tire beads loose until tire has been completely deflated: otherwise, explosive separation of wheel components will result.

Do not pry between wheel flanges and tire beads as this can damage the wheel and tire.

Use caution when removing wheel bolts or nuts.

Remove tire from wheel using a wheel demounting fixture.

Valve stem, fusible plugs, wheel keys, heat shields, balance weights, and associated hardware should not be removed if demountable flange only is to be removed for tire change.

Fusible plugs and bearing cups should not be removed unless replacement is necessary, if paint is to be stripped, or if a thorough inspection of the wheel is to be made.

When removal and replacement of fusible plugs is required, remove by pressing out with a blunt instrument such as a wooden rod. Exercise caution to ensure wheel sealing surfaces are not damaged.

9-18. REASSEMBLING THE WHEEL. The correct assembly of the wheel affects the balance of the tire. After the wheel halves and bolts/nuts have been inspected and found serviceable, put a little talc on the tube and insert it in the tire. Align the heavy spot of the tube (usually marked with a yellow line) with the light spot of the tire (usually marked with a red dot). If the tube does not have a balance mark, align the valve of the tube with the balance mark on the line. Remove the valve core and inflate the tube momentarily to "seat" the tube and let the air run out. Put one wheel half in the tire and align the wheel half with the valve hole up with the valve on the tube. Insert the other wheel half in the tire and align the bolt holes. Insert the wheel bolts and torque to the manufacturer's recommended value.

NOTE: It is highly recommended that the tire be placed in a cage so that if the wheel fails, the mechanic is protected from injury.

Again inflate the tube with 5 or 10 psi and let the air out to re-seat the tube. Install the valve core, and fill the tire to the recommended pressure.

9-19. SLIPPAGE. To reduce the possibility of tire and tube failure due to slippage, and to provide a means of detecting tire slippage, tires should be marked and indexed with the wheel rim. Paint a mark one inch wide and two inches long across the tire side wall and wheel rim. Use a permanent type paint in a contrasting color, such as white, red, or orange. Pre-flight inspection must include a check of slippage marks for alignment. If the slippage marks are not in alignment, a detailed inspection must be made, the reason determined, and if necessary, the condition corrected before the next flight.

NOTE: Mechanics should be aware that retread tires can be diametrically bigger than a "new" tire. While this does not pose a problem on fixed landing gear aircraft, it may pose a problem on retractable gear aircraft. Due to a 5 to 8 percent expansion of the tire caused by the ambient temperature, if a retread tire is installed on a retractable gear aircraft, it is strongly recommended that a retraction test be performed. This is to ensure the tire will not become wedged in the wheel well during take-off and landing operation.

9-20. WHEEL INSPECTION. Check wheels for damage. Wheels that are cracked or damaged must be taken out of service for repair or replacement in accordance with the manufacturer's instruction manual.

9-21. WHEEL INSTALLATION. Various procedures are used for installing wheel assemblies on an aircraft.

a. The axle should first be cleaned and inspected for surface damage, damage to the axle threads, and the general condition and security of bolts holding the axle onto the landing-gear leg. The wheel bearings should be cleaned and packed with approved grease. The wheel bearing and tire must be inspected and assembled. Many aircraft have specific torque requirements for the wheel-retaining nuts. These torque requirements may have two values specified. The retaining nut is first tightened to the higher value to seat the bearing. It is then backed off and tightened to the lower value specified. While tightening the wheel retaining nuts, the wheel should be rotated.

b. Great care should be exercised to see that the wheel-retaining nuts are not overtightened. In the absence of specific instructions, the wheel-retaining nut is tightened until bearing drag is felt. The nut is then backed off about one serration (castellation) or one-sixth turn before bending up the tab on the tab-lock washer or installing the cotter pin.

c. The grease cover or wheel cover, if used, is then installed. During this installation any required brake, air-pressure sensors, and speed-sensor components should be installed and connected, as appropriate, for the specific aircraft.

9-22.—9.24. [RESERVED].

SECTION 2. HYDRAULIC SYSTEMS

9-25. GENERAL. Hydraulic systems in aircraft provide a means for the operation of aircraft components. The operation of landing gear, flaps, flight control surfaces and brakes is largely accomplished with hydraulic power systems. Hydraulic system complexity varies from small aircraft that require fluid only for manual operation of the wheel brakes to large transport aircraft where the systems are large and complex. To achieve the necessary redundancy and reliability, the system may consist of several subsystems. Each subsystem has a power generating device (pump) reservoir, accumulator, heat exchanger, filtering system, etc. System operating pressure may vary from a couple hundred psi in small aircraft and rotorcraft to several thousand psi in large transports. Generally, the larger the aircraft, the more mechanical work is required to control the aircraft's various functions. Consequently, the system operating pressure increases accordingly. Primarily, hydraulic power is generated by either engine driven or electric motor driven pumps. The majority of hydraulic pumps are pressure compensated to provide a constant output pressure at a flow-rate demanded by the system. Some constant displacement pumps with a relief valve are used on the smaller aircraft.

9-26. PURPOSES OF HYDRAULIC SYSTEMS. Hydraulic systems make possible the transmission of pressure and energy at the best weight per horsepower ratio.

9-27. TYPES OF HYDRAULIC FLUID. There are three principal categories of hydraulic fluids; mineral base fluids, polyalphaolefin base, and phosphate ester base fluids. When servicing a hydraulic system, the technician must be certain to use the correct category of replacement fluid. Hydraulic fluids are not necessarily compatible. For example, contamination of the fire-resistant fluid MIL-H-83282 with MIL-H-5606 may render the MIL-H-83282 non fire-resistant.

a. Mineral-Base Fluids. MIL-H-5606, mineral oil-based hydraulic fluid is the oldest, dating back to the 1940's. It is used in many systems, especially where the fire hazard is comparatively low. MIL-H-6083 is simply a rust-inhibited version of MIL-H-5606. They are completely interchangeable. Suppliers generally ship hydraulic components with MIL-H-6083.

b. Polyalphaolefin-Based Fluids. MIL-H-83282, is a fire-resistant hydrogenated polyalphaolefin-based fluid developed in the 1960's to overcome the flammability characteristics of MIL-H-5606. MIL-H-83282 is significantly more flame resistant than MIL-H-5606, but a disadvantage is the high viscosity at low temperature. It is generally limited to -40 ▪F. However, it can be used in the same system and with the same seals, gaskets, and hoses as MIL-H-5606. MIL-H-46170 is the rust-inhibited version of MIL-H-83282. Small aircraft predominantly use MIL-H-5606 but some have switched to MIL-H-83282, if they can accommodate the high viscosity at low temperature.

c. Phosphate Ester-Based Fluid (Skydrol/Hyjet). These fluids are used in most commercial transport category aircraft, and are extremely fire-resistant. However, they are not fireproof and under certain conditions, they will burn. The earliest generation of these fluids was developed after World War II as a result of the growing number of aircraft hydraulic brake fires which drew the collective concern of the commercial aviation industry.

(1) Progressive development of these fluids occurred as a result of performance requirements of newer aircraft designs. The

airframe manufacturers dubbed these new generations of hydraulic fluid as "types" based on their performance. Today, types IV and V fluids are used. Two distinct classes of type IV fluids exist based on their density: class I fluids are low density and class II are standard density. The class I fluids provide weight savings advantages versus class II. Monsanto and Exxon are the suppliers of the type IV phosphate ester-based aviation hydraulic fluids.

(2) In addition to the type IV fluids that are currently in use, type V fluids are being developed in response to industry demands for a more thermally stable fluid at higher operating temperatures. Type V fluids will be more resistant to hydrolytic and oxidative degradation at high temperature than the type IV fluids.

d. Materials of Construction. Hydraulic systems require the use of special accessories that are compatible with the hydraulic fluid. Appropriate seals, gaskets, and hoses must be specifically designated for the type of fluid in use. Care must be taken to ensure that the components installed in the system are compatible with the fluid. When gaskets, seals, and hoses are replaced, positive identification should be made to ensure that they are made of the appropriate material.

(1) Phosphate ester-based hydraulic fluids have good solvency properties and may act as plasticizer for certain polymers. Care should be taken in handling to keep the fluid from spilling on plastic materials and paint finishes.

(2) If a small amount of the fluid is spilled during handling, it must be cleaned up immediately with a dry cloth. When larger quantities are spilled, an absorbent sweeping compound is recommended. A final cleaning with an approved solvent or detergent should remove any traces of fluid.

9-28. HANDLING HYDRAULIC FLUID. In addition to any other instructions provided in the aircraft maintenance manual or by the fluid supplier, the following general precautions must be observed in the handling of hydraulic fluids:

a. Ensure that each aircraft hydraulic system is properly identified to show the kind of fluid to be used in the system. Identification at the filler cap or valve must clearly show the type of fluid to be used or added.

b. Never allow different categories of hydraulic fluids to become mixed. Chemical reactions may occur, fire resistant fluids may lose their fire resistance, seals may be damaged, etc.

c. Never, under any circumstances, service an aircraft system with a fluid different from that shown on the instruction plate.

d. Make certain that hydraulic fluids and fluid containers are protected from contamination of any kind. Dirt particles may cause hydraulic units to become inoperative, cause seal damage, etc. If there is any question regarding the cleanliness of the fluid, do not use it. Containers for hydraulic fluid must never be left open to air longer than necessary.

e. Do not expose fluids to high temperature or open flames. Mineral-based fluids are highly flammable.

f. The hydrocarbon-based hydraulic fluids are, in general, safe to handle. To work with these fluids, reasonable handling procedures must always be followed. Take precaution to avoid fluid getting in the eyes. If fluid contacts the eye, wash immediately with water.

technician refer to the troubleshooting information furnished by the manufacturer.

(1) Lack of pressure in a system can be caused by a sheared pump shaft, defective relief valve, the pressure regulator, an unloading valve stuck in the "kicked-out" position, lack of fluid in the system, the check valve installed backward, or any condition that permits free flow back to the reservoir or overboard. If a system operates satisfactorily with a ground test unit but not with the system pump, the pump should be examined.

(2) If a system fails to hold pressure in the pressure section, the likely cause is the pressure regulator, an unloading valve, a leaking relief valve, or a leaking check valve.

(3) If the pump fails to keep pressure up during operation of the subsystem, the pump may be worn or one of the pressure-control units may be leaking.

(4) High pressure in a system may be caused by a defective or improperly-adjusted pressure regulator, an unloading valve, or by an obstruction in a line or control unit.

(5) Unusual noise in a hydraulic system, such as banging and chattering, may be caused by air or contamination in the system. Such noises can also be caused by a faulty pressure regulator, another pressure-control unit, or a lack of proper accumulator action.

(6) Maintenance of hydraulic system components involves a number of standard practices together with specialized procedures set forth by manufacturers such as the replacement of valves, actuators, and other units, including tubing and hoses. Care should be exercised to prevent system contamination damage to seals, packings, and other parts, and to apply proper torque in connecting fittings. When installing fittings, valves, etc. always lubricate the threads with hydraulic fluid.

(7) Overhaul of hydraulic and pneumatic units is usually accomplished in approved repair facilities; however, replacement of seals and packings may be done from time to time by technicians in the field. When a unit is disassembled, all O-ring and Chevron seals should be removed and replaced with new seals. The new seals must be of the same material as the original and must carry the correct manufacturer's part number. No seal should be installed unless it is positively identified as the correct part and the shelf life has not expired.

(8) When installing seals, care should be exercised to ensure that the seal is not scratched, cut, or otherwise damaged. When it is necessary to install a seal over sharp edges, the edges must be covered with shim stock, plastic sheet, or electrical tape.

(9) The replacement of hydraulic units and tubing usually involves the spillage of some hydraulic fluid. Care should be taken to ensure that the spillage of fluid is kept to a minimum by closing valves, if available, and by plugging lines immediately after they are disconnected. All openings in hydraulic systems should be capped or plugged to prevent contamination of the system.

(10) The importance of the proper torque applied to all nuts and fittings in a system cannot be over-emphasized. Too much torque will damage metal and seals, and too little torque will result in leaks and loose parts. The proper torque wrenches with the appropriate range should be used in assembling system units.

f. Disposal of Used Hydraulic Fluids. In the absence of organizational guidelines, the

technician should be guided by local, state, and federal regulations, with regard to means of disposal of used hydraulic fluid. Presently, the most universally accepted procedure for disposal of phosphate ester-based fluid is incineration.

9-30. HYDRAULIC LINES AND FITTINGS. Carefully inspect all lines and fittings at regular intervals to ensure airworthiness. Investigate any evidence of fluid loss or leaks. Check metal lines for leaks, loose anchorage, scratches, kinks, or other damage. Inspect fittings and connections for leakage, looseness, cracks, burrs, or other damage. Replace or repair defective elements. Make sure the lines and hoses do not chafe against one another and are correctly secured and clamped.

a. Replacement of Metal Lines. When inspection shows a line to be damaged or defective, replace the entire line or, if the damaged section is localized, a repair section may be inserted. In replacing lines, always use tubing of the same size and material as the original line. Use the old tubing as a template in bending the new line, unless it is too greatly damaged, in which case a template can be made from soft iron wire. Soft aluminum tubing (1100, 3003, or 5052) under ¼-inch outside diameter may be bent by hand.. For all other tubing use an acceptable hand or power tube-bending tool. Bend tubing carefully to avoid excessive flattening, kinking, or wrinkling. Minimum bend radii values are shown in table 9-2. A small amount of flattening in bends is acceptable, but do not exceed 75 percent of the original outside diameter. Excessive flattening will cause fatigue failure of the tube. When installing the replacement tubing, line it up correctly with the mating part so that it is not forced into alignment by tightening of the coupling nuts.

b. Tube Connections. Many tube connections are made using flared tube ends with standard connection fittings: AN-818 (MS 20818) nut and AN-819 (MS 20819) sleeve. In forming flares, cut the tube ends square, file smooth, remove all burrs and sharp edges, and thoroughly clean. The tubing is then flared using the correct 37-degree aviation flare forming tool for the size of tubing and type of fitting. A double flare is used on soft aluminum tubing 3/8-inch outside diameter and under, and a single flare on all other tubing. In making the connections, use hydraulic fluid as a lubricant and then tighten. Overtightening will damage the tube or fitting, which may cause a failure. Under-tightening may cause leakage which could result in a system failure.

CAUTION: Mistaken use of 45-degree automotive flare forming tools may result in improper tubing flare shape and angle; causing misfit, stress and strain, and probable system failure.

c. Repair of Metal Tube Lines. Minor dents and scratches in tubing may be repaired. Scratches or nicks not deeper than 10 percent of the wall thickness in aluminum alloy tubing, that are not in the heel of a bend, may be repaired by burnishing with hand tools. Replace lines with severe die marks, seams, or splits in the tube. Any crack or deformity in a flare is unacceptable and cause for rejection. A dent less than 20 percent of the tube diameter is not objectionable unless it is in the heel of a bend. A severely-damaged line should be replaced; however, it may be repaired by cutting out the damaged section and inserting a tube section of the same size and material. Flare both ends of the undamaged and replacement tube sections and make the connection by using standard unions, sleeves, and tube nuts. If the damaged portion is short enough, omit the insert tube and repair by using one union and two sets of connection fittings.

TABLE 9-2. Tube data.

Dash Nos. Ref.	Tubing OD inches	Wrench torque for tightening AN-818 Nut (pound inch)						Minimum bend radii measured to tubing centerline. Dimension in inches.	
		Aluminum-alloy tubing		Steel tubing		Aluminum-alloy tubing (Flare MS33583) for use on oxygen lines only			
		Minimum	Maximum	Minimum	Maximum	Minimum	Maximum	Alum. Alloy	Steel
-2	1/8	20	30	75	85	--	--	3/8	--
-3	3/16	25	35	95	105	--	--	7/16	21/32
-4	1/4	50	65	135	150	--	--	9/16	7/8
-5	5/16	70	90	170	200	100	125	3/4	1-1/8
-6	3/8	110	130	270	300	200	250	15/16	1-5/16
-8	1/2	230	260	450	500	300	400	1-1/4	1-3/4
-10	5/8	330	360	650	700	--	--	1-1/2	2-3/16
-12	3/4	460	500	900	1000	--	--	1-3/4	2-5/8
-16	1	500	700	1200	1400	--	--	3	3-1/2
-20	1-1/4	800	900	1520	1680	--	--	3-3/4	4-3/8
-24	1-1/2	800	900	1900	2100	--	--	5	5-1/4
-28	1-3/4	--	--	--	--	--	--	--	--
-32	2	1800	2000	2660	2940	--	--	8	7

d. Replacement of Flexible Lines. When replacement of a flexible line is necessary, use the same type, size, part number, and length of hose as the line to be replaced. Check TSO requirements. If the replacement of a hose with a swaged-end type fitting is necessary, obtain a new hose assembly of the correct size and composition. Certain synthetic oils require a specially compounded synthetic rubber hose, which is compatible. Refer to the aircraft manufacturer's service information for the correct part number for the replacement hose. If the fittings on each end are of the correct type or sleeve type, a replacement may be fabricated as shown in figure 9-8. Before cutting new flexible wire braided hose to the proper size, tape the hose tightly with masking tape and cut in the center of the masking tape to prevent fraying. The use of a mandrel will prevent cutting the inside of the hose when inserting the fittings. Typical aircraft hose specifications and their uses are shown in table 9-3. Install hose assemblies without twisting. (See figure 9-9.) A hose should not be stretched tight between two fittings as this will result in overstressing and eventual failure. The length of hose should be sufficient to provide about 5 to 8 percent slack. Avoid tight bends in flex lines as they may result in failure. Never exceed the minimum bend radii as indicated in figure 9-10.

(1) Teflon hose is used in many aircraft systems because it has superior qualities for certain applications. Teflon is compounded from tetrafluoroethylene resin which is unaffected by fluids normally used in aircraft. It has an operating range of -65°F to 450 °F. For these reasons, Teflon is used in hydraulic and engine lubricating systems where temperatures and pressures preclude the use of rubber hose. Although Teflon hose has excellent performance qualities, it also has peculiar characteristics that require extra care in handling. It tends to assume a permanent set when exposed to high pressure or temperature. Do not attempt to straighten a hose that has been in service. Any excessive bending or twisting may cause kinking or weakening of the tubing wall. Replace any hose that shows signs of leakage, abrasion, or kinking. Any hose suspected of kinking may be checked with a steel ball of proper size. Table 9-4 shows hose and ball sizes. The ball will not pass through if the hose is distorted beyond limits.

(2) If the hose fittings are of the reusable type, a replacement hose may be

fabricated as described in figure 9-8. Refer to figure 9-10 for minimum bend radii. When a hose assembly is removed, the ends should be tied as shown in figure 9-11, so that the preformed shape will be maintained. Refer to figure 9-12 for minimum bend radii for teflon hose.

(3) All flexible hose installations should be supported at least every 24 inches. Closer supports are preferred. They should be carefully routed and securely clamped to avoid abrasion, kinking, or excessive flexing. Excessive flexing may cause weakening of the hose or loosening at the fittings.

e. O-Ring Seals. An understanding of O-ring seal applications is necessary to determine when replacement should be made. The simplest application is where the O-ring merely serves as a gasket when it is compressed within a recessed area by applying pressure with a packing nut or screw cap. Leakage is not normally acceptable in this type of installation. In other installations, the O-ring seals depend primarily upon their resiliency to accomplish their sealing action. When moving parts are involved, minor seepage may be normal and acceptable. A moist surface found on moving parts of hydraulic units is an indication the seal is being properly lubricated. In pneumatic systems, seal lubrication is provided by the installation of a grease-impregnated felt wiper ring. When systems are static, seepage past the seals is not normally acceptable.

f. Storage of replacement seals.

(1) Store O-ring seals where temperature does not exceed 120° F.

(2) Keep seals packaged to avoid exposure to ambient air and light, particularly sunlight.

g. During inspection, consider the following to determine whether seal replacement is necessary.

(1) How much fluid is permitted to seep past the seals? In some installations minor seepage is normal. Refer to the manufacturer's maintenance information.

(2) What effect does the leak have on the operation of the system? Know the system.

(3) Does the leak of fluid create a hazard or affect surrounding installations? A check of the system fluid and a knowledge of previous fluid replenishment is helpful.

(4) Will the system function safely without depleting the reservoirs until the next inspection?

h. Do's and Don'ts that apply to O-ring seals.

(a) Correct all leaks from static seal installations.

(b) Don't retighten packing gland nuts; retightening will, in most cases, increase rather than decrease the leak.

(c) Never reuse O-ring seals because they tend to swell from exposure to fluids, and become set from being under pressure. They may have minor cuts or abrasions that are not readily discernible by visual inspection.

(d) Avoid using tools that might damage the seal or the sealing surface.

(e) Do not depend upon color-coding. Coding may vary with manufacturer

(f) Be sure that part number is correct

(g) Retain replacement seals in their package until ready for use. This provides proper identification and protects the seal from damage and contamination.

(h) Assure that the sealing surfaces are clean and free of nicks or scratches before installing seal.

(i) Protect the seal from any sharp surfaces that it may pass over during installation. Use an installation bullet or cover the sharp surfaces with tape.

(j) Lubricate the seal so it will slide into place smoothly.

(k) Be sure the seal has not twisted during installation.

i. Hydraulic System Pressure Test. When a flexible hose has been repaired or overhauled using existing hardware and new hose material, before the hose is installed on the aircraft it is recommended that the hose is tested to at least 1.5 system pressure. A new hose can be operationally checked after it is installed in the aircraft using system pressure.

j. Hydraulic Components. Hydraulic components such as pumps, actuating cylinders, selector valves, relief valves, etc., should be repaired or adjusted following the airplane and component manufacturer's instructions. Inspect hydraulic filter elements at frequent intervals and replace as necessary.

TABLE 9-4. Ball diameters for testing hose restrictions or kinking.

HOSE SIZE	BALL SIZE
-4	5/64
-5	9/64
-6	13/64
-8	9/32
-10	3/8
-12	1/2
-16	47/64
-20	61/64

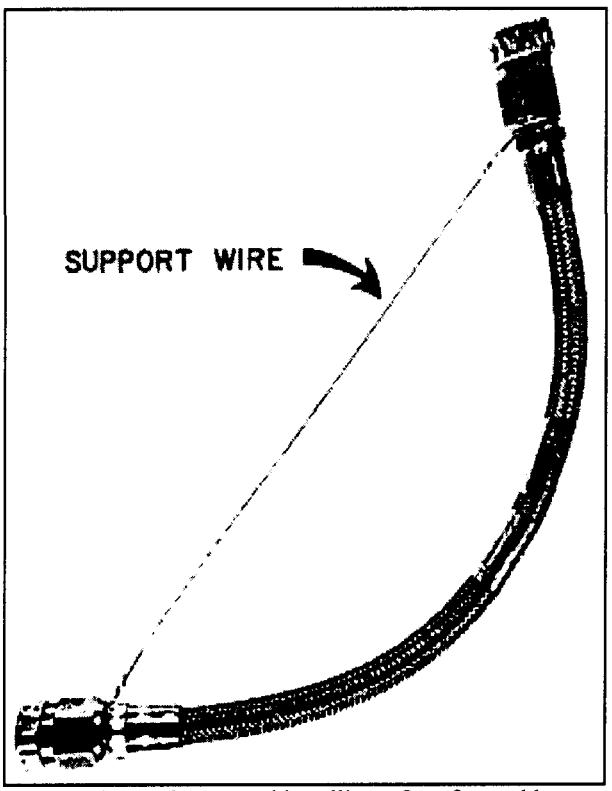

FIGURE 9-11. Suggested handling of preformed hose.

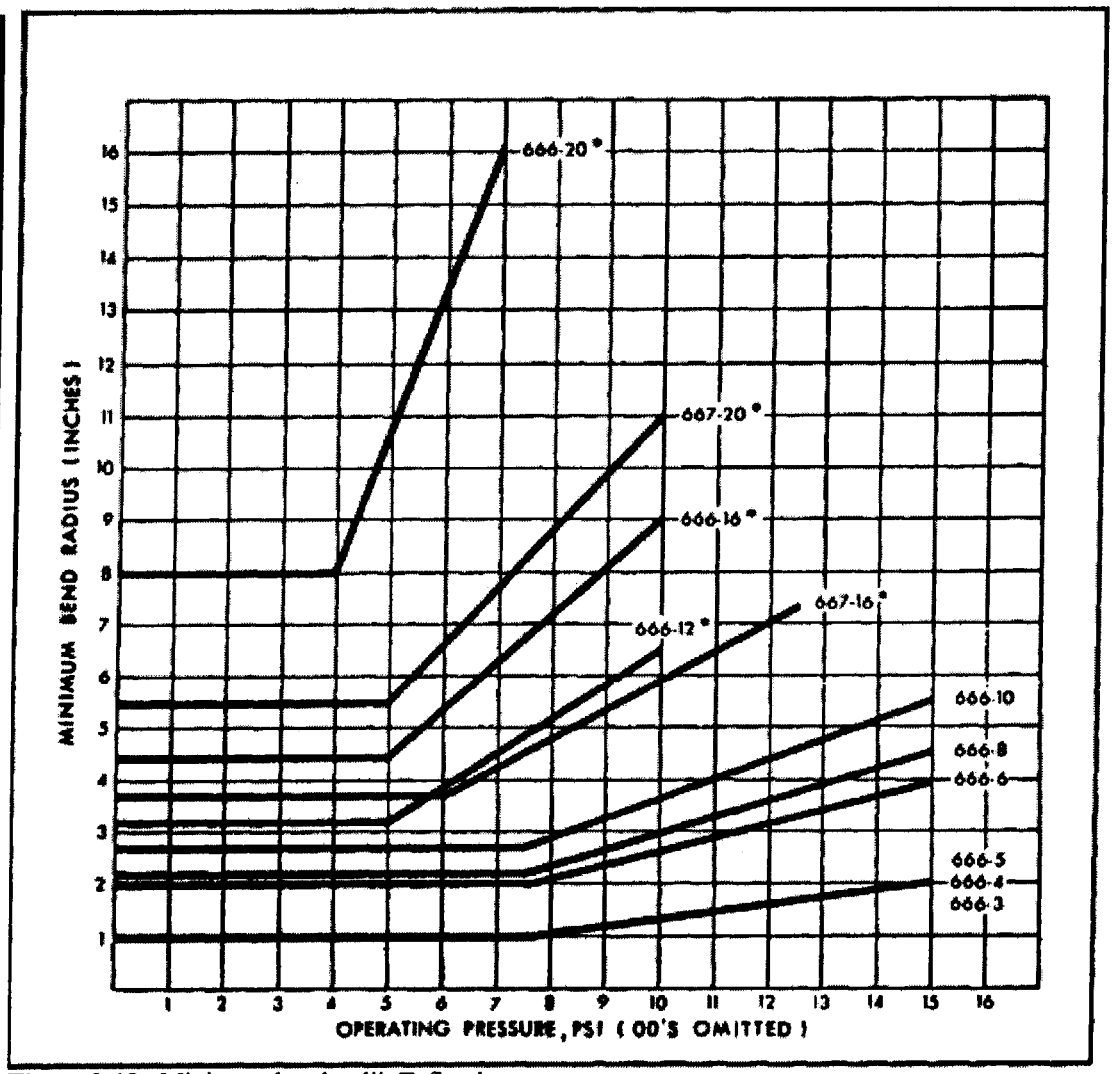

Figure 9-12. Minimum bend radii–Teflon hose.

9.31.—9.36 [RESERVED.]

SECTION 3. EMERGENCY EQUIPMENT

9-37. LIFE RAFTS. Inflatable life rafts are subject to general deterioration due to aging. Experience has indicated that such equipment may be in need of replacement at the end of 5 years due to porosity of the rubber-coated material. Wear of such equipment is accelerated when stowed on board aircraft because of vibration which causes chafing of the rubberized fabric. This ultimately results in localized leakage. Leakage is also likely to occur where the fabric is folded because sharp corners are formed. When these corners are in contact with the carrying cases or with adjacent parts of the rubberized fabric, they tend to wear through due to vibration (Ref: TSO-C70a).

a. When accomplishing maintenance, repair, and inspection of unpacked rafts, personnel should not step on any part of the raft or flotation tubes while wearing shoes. Rafts should not be thrown or dropped, since damage to the raft or accessories may result. Particular care should be exercised at all times to prevent snagging, cutting, and contact with gasoline, acids, oils, and grease. High standards of performance for proper maintenance, inspection, and repair cannot be overemphasized, since the lives of passengers could be involved.

b. Inspection and inflation tests, when applicable, will be accomplished during storage and after installation in an aircraft in accordance with the manufacturer's specifications and/or FAA-approved procedures. Accessory items will be installed during these inspections. A raft knife will be attached by a 24-inch nylon lanyard to the mooring eye located above the CO_2 cylinder case to enable rapid cutting of the mooring line.

9-38. LIFE RAFT INSPECTIONS. Inspection of life rafts should be performed in accordance with the manufacturer's specifications. General inspection procedures to be performed on most life rafts are as follows.

CAUTION: Areas where life rafts are inspected or tested must be smooth, free of splinters, sharp projections, and oil stains. Floors with abrasive characteristics, such as concrete or rough wood, will be covered with untreated tarpaulins or heavy clean paper.

a. Inspect life rafts for cuts, tears, or other damage to the rubberized material. If the raft is found to be in good condition, remove the CO_2 bottle(s) and inflate the raft with air to a pressure of 2 psi. The air should be introduced at the fitting normally connected to the CO_2 bottle(s). After at least 1 hour, to allow for the air within the raft to adjust itself to the ambient temperature, check pressure and adjust, if necessary, to 2 psi and allow the raft to stand for 24 hours. If, after 24 hours, the pressure is less than 1 psi, examine the raft for leakage by using soapy water. In order to eliminate pressure variations due to temperature differences at the time the initial and final reading are taken, test the raft in a room where the temperature is fairly constant. If the pressure drop is satisfactory, the raft should be considered as being in an airworthy condition and returned to service after being fitted with correctly charged CO_2 bottles as determined by weighing them. Rafts more than 5 years old are likely to be unairworthy due to deterioration. It is suggested that serviceable rafts be marked to indicate the date of inspection and that soapstone be used when folding them preparatory to insertion into the carrying case. Take care to see that all of the raft's required equipment is on board and properly stowed. If the raft lanyard, used to prevent the raft from floating away from the airplane, is in need of

replacement, use a lanyard not less than 20 feet long and having a breaking strength of about 75 pounds.

b. It is recommended that the aforementioned procedure be repeated every 18 months using the CO_2 bottle(s) for inflation. If a single bottle is used for inflating both compartments, it should be noted whether the inflation is proceeding equally to both compartments. Occasionally, the formation of "carbon-dioxide snow" may occur in one passage of the distribution manifold and divert a larger volume of gas to one compartment, which may burst if the mattress valve is not open to relieve the pressure. If the pressure is satisfactory, return the raft to service in accordance with the procedure outlined.

c. Inspect the CO_2 cylinder for evidence of cross-threading or stripping.

d. Inspect the CO_2 bottle inflation valve cable rigging as follows.

(1) Remove the screws that attach the cover plate to the valve and remove the cover plate.

(2) Inspect the firing line cable ball swage for engagement in the correct recess for either "Upward Pull" or "Downward Pull." The cable will be wrapped around the sheave approximately 270 degrees.

(3) Reposition the cable ball swage as required. (See figure 9-12.)

(4) Replace the cover plate. The green dot on the sheave should be visible through the window in the cover plate, indicating a charged cylinder.

e. Check the CO_2 cylinder release cable and housing for condition and security.

f. Make sure the safety deflector is removed from the cylinder outlet before connecting the cylinder to the raft. (See figure 9-12.)

g. Stencil the life raft's inspection date on the raft.

9-39. SURVIVAL KIT INSPECTION.

a. Survival Kit Contents. Each raft accommodating passengers or crew members should contain, as a minimum, the following:

Hand Pump (if required)
Desalting Kit, First-Aid Kit
Mirror/Reflector
Emergency Rations
Tarpaulins
Fishing Kit
Raft Knife
Compass
Protective Ointment (Sunburn)
Oars
Emergency Water Containers
Repair Kits
Signal Flares
Carrying Case
Locator Beacon and Battery
Lines and Anchor
Police Whistle
Flashlight
Thermal Protective Aid
Light-sticks
Solar Still Kit
Survival Manual
Duct Tape
Plastic Trash Bags
Accessory Containers
- Bailing Bucket
- Sponge
Dye Marker

appears to have been tampered with, the parachute must be repacked by a properly certified rigger.

b. Safety Belts shall be of an approved type. All seat belts and restraint systems must conform to standards established by the FAA. These standards are contained in Technical Standard Order TSO C22 for seat belts and TSO C114 for restraint systems.

(1) Safety belts eligible for installation in aircraft must be identified by the proper TSO markings on the belt. Each safety belt must be equipped with an approved metal to metal latching device. Airworthy type-certificated safety belts currently in aircraft may be removed for cleaning and reinstalled. However, when a TSO safety belt is found unairworthy, replacement with a new TSO-approved belt or harness is required.

(2) The webbing of safety belts, even when mildew-proofed, is subject to deterioration due to constant use, cleaning, and the effects of aging. Fraying of belts is an indication of wear, and such belts are likely to be unairworthy because they can no longer hold the minimum required tensile load.

(3) Safety belts shall be repaired in accordance with specifications approved by the responsible FAA ACO.

9-47. OXYGEN SYSTEMS. The following instructions are to serve as a guide for the inspection and maintenance of aircraft oxygen systems. The information is applicable to both portable and permanently-installed equipment.

a. Aircraft Gaseous Oxygen Systems. The oxygen in gaseous systems is supplied from one or more high- or low-pressure oxygen cylinders. Since the oxygen is compressed within the cylinder, the amount of pressure indicated on the system gauge bears a direct relationship to the amount of oxygen contained in the cylinder. The pressure-indicating line connection is normally located between the cylinder and a pressure-reducing valve.

NOTE: Some of the gaseous oxygen systems do not use pressure-reducing valves. The high pressure is reduced to a useable pressure by a regulator. This regulator is located between the high- and low-pressure system.

CAUTION: Oxygen rich environments are dangerous.

b. Portable Oxygen Systems. The three basic types of portable oxygen systems are: demand, pressure demand, and continuous flow. The components of these systems are identical to those of a permanent installation with the exception that some parts are miniaturized as necessary. This is done in order that they may be contained in a case or strapped around a person's shoulder. It is for this portability reason that special attention be given to assuring that any storage or security provision for portable oxygen equipment in the aircraft is adequate, in good condition, and accessible to the user.

NOTE: Check portable equipment including its security provisions frequently, since it is more susceptible to personnel abuse than a permanently-installed system.

9-48. INSPECTION. Hands, clothing, and tools must be free of oil, grease, and dirt when working with oxygen equipment. Traces of these organic materials near compressed oxygen may result in spontaneous combustion, explosions, and/or fire.

a. Oxygen Tanks and Cylinders. Inspect the entire exterior surface of the cylinder for indication of abuse, dents, bulges, and strap

chafing.

(1) Examine the neck of cylinder for cracks, distortion, or damaged threads.

(2) Check the cylinder to determine if the markings are legible.

(3) Check the date of the last hydrostatic test. If the periodic retest date is past, do not return the cylinder to service until the test has been accomplished.

(4) Inspect the cylinder mounting bracket, bracket hold-down bolts, and cylinder-holding straps for cracks, deformation, cleanliness, and security of attachment.

(5) In the immediate area where the cylinder is stored or secured, check for evidence of any types of interference, chafing, deformation, or deterioration.

b. Lines and Fittings.

(1) Inspect oxygen lines for chafing, corrosion, flat spots and irregularities, i.e., sharp bends, kinks, and inadequate security.

(2) Check fittings for corrosion around the threaded area where lines are joined. Pressurize the system and check for leaks. (See paragraph 9-49b(2)(d).)

CAUTION: In pressurizing the system, actuate the valve slowly to avoid surging which could rupture the line.

c. Regulators, Valves, and Gauges.

(1) Examine all parts for cracks, nicks, damaged threads or other apparent damage.

(2) Actuate the regulator controls and the valve to check for ease of operation.

(3) Determine if the gauge is functioning properly by observing the pressure build-up and the return to zero when the system oxygen is bled off.

d. Masks and Hoses.

(1) Check the oxygen mask for fabric cracks and rough face seals. If the mask is a full-face model, inspect the glass or plastic for cleanliness and state of repair.

(2) When appropriate, with due regard to hygienic considerations, the sealing qualities of an oxygen mask may be tested by placing a thumb over the connection at the end of the mask tube and inhaling very lightly. Remove the thumb from the disconnect after each continuous inhalation. If there is no leakage, the mask will adhere tightly to the face during inhalation, and definite resistance to inhalation will be noticeable.

(3) Flex the mask hose gently over its entirety and check for evidence of deterioration or dirt.

(4) Examine the mask and hose storage compartment for cleanliness and general condition.

(5) If the mask and hose storage compartment is provided with a cover or release mechanism, thoroughly check the operation of the mechanism.

9-49. MAINTENANCE.

a. Oxygen Tanks, Cylinders, and Hold-Down Brackets.

(1) Remove from service any cylinders that show signs of abuse, dents, bulges, cracks, distortion, damaged thread, or defects which might render them unsafe. Typical examples

of oxygen cylinder damage are shown in figure 9-14.

(2) When replacing an oxygen cylinder, be certain that the replacement cylinder is of the same size and weight as the one removed.

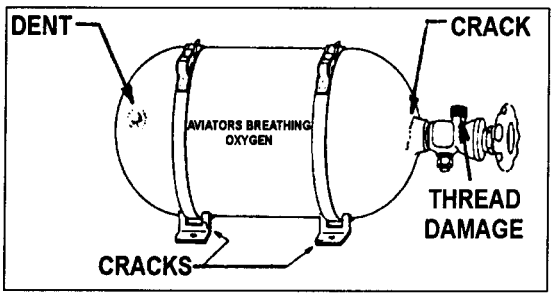

FIGURE 9-14. Oxygen cylinder damage.

NOTE: Cylinders having greater weight or size will require strengthened cylinder mounting brackets and a reevaluation to determine that the larger or heavier cylinder will not interfere with adjacent systems, components, or structural members, and that the strength of attaching structure is adequate and any additional weight will be computed into the aircraft's weight and balance report.

(3) Replace or repair any cylinder mounting brackets that show signs of wear. Visible cracks may be welded in accordance with manufacturer's standards. Replace the cylinder straps or clamps that show wear or abuse. For typical mounting bracket cracks and failure, see figure 9-15.

b. Lines and Fittings.

(1) Replace any oxygen line that is chafed, rusted, corroded, dented, cracked, or kinked.

(2) Clean oxygen system fittings showing signs of rusting or corrosion in the threaded area. To accomplish this, use a cleaner recommended by manufacturers of oxygen equipment. Replace lines and fittings that cannot be cleaned.

(a) The high-pressure lines which are located between the oxygen bottle (outside the oxygen service filler) and the regulator are normally fabricated from stainless steel or thick-wall, seamless copper alloy tubing. The fittings on high-pressure lines are normally silver brazed.

NOTE: Use silver alloys free of cadmium when silver brazing. The use of silver brazing alloys, which contain cadmium, will emit a poisonous gas when heated to a molten state. This gas is extremely hazardous to health if inhaled.

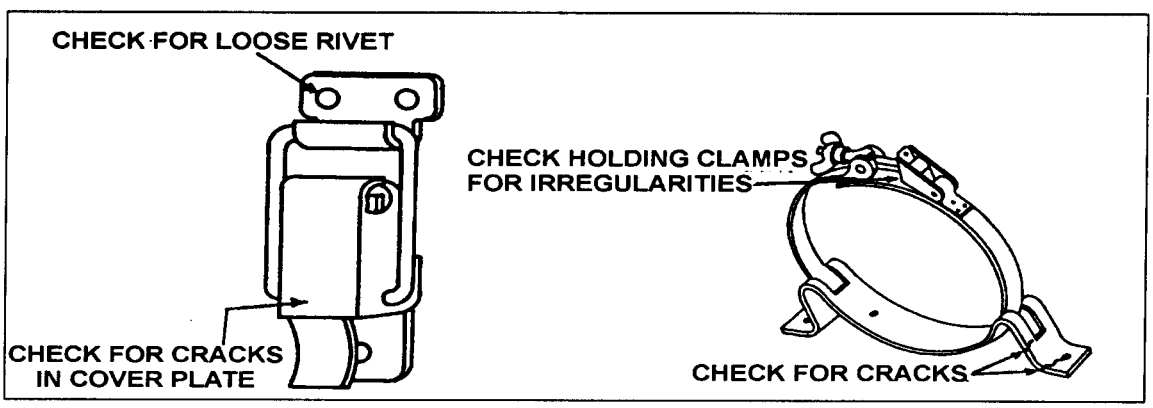

FIGURE 9-15. Cylinder brackets and clamps.

(b) The low-pressure lines extend from the pressure regulator to each passenger and crew oxygen outlet. These lines are fabricated from seamless aluminum alloy, copper, or flexible hose. Normally, flare- or flange-type connections are used.

CAUTION: Do not allow oil, grease, flammable solvent, or other combustibles such as lint or dust to come in contact with threads or any parts that will be exposed to pressurized oxygen.

(c) It is advisable to purge the oxygen system any time work has been accomplished on any of the lines and fittings. Use dry nitrogen or dry air for purging the system. All open lines should be capped immediately after purging.

(d) When oxygen is being lost from a system through leakage, a sequence of steps may be necessary to locate the opening. Leakage may often be detected by listening for the distinct hissing sound of escaping gas. If this check proves negative, it will be necessary to soap-test all lines and connections with a castile soap and water solution or specially compounded leak-test material. Make the solution thick enough to adhere to the contours of the fittings. At the completion of the leakage test, remove all traces of the soap and water.

CAUTION: Do not attempt to tighten any connections while the system is charged.

c. Regulators, Valves, and Gauges. Line maintenance of oxygen regulators, valves, and gauges does not include major repair. These components are precision made and their repair usually requires the attention of a repair station or the manufacturer. Care must be taken when reinstalling these components to ascertain if the threaded area is free of nicks, burrs, and contaminants that would prevent the connections from sealing properly.

CAUTION: Do not use petroleum lubricants on these components.

d. Masks and Hoses.

(1) Troubleshooting. If a mask assembly is defective (leaks, does not allow breathing, or contains a defective microphone), it is advisable to return the mask assembly to the manufacturer or a repair station.

(2) Maintenance Practice and Cleaning.

(a) Clean and disinfect the mask assemblies after use, as appropriate.

NOTE: Use care to avoid damaging the microphone assembly while cleaning and sterilizing.

(b) Wash the mask with a mild soap solution and rinse it with clear water.

(c) To sterilize, swab the mask thoroughly with a gauze or sponge soaked in a water merthiolate solution. This solution should contain 1/5-teaspoon of merthiolate per 1 quart of water. Wipe the mask with a clean cloth and air dry.

(d) Replace the hose if it shows evidence of deterioration.

(e) Hoses may be cleaned in the same manner as the mask.

(f) Observe that each mask breathing tube end is free of nicks, and that the tube end will slip into the cabin oxygen receptacle with ease and not leak.

9-50. FUNCTIONAL TESTING AFTER REPAIR. Following repair, and before inspection plates, cover plates, or upholstering are replaced, test the entire system.

a. Open the cylinder valve slowly and observe the pressure gauge on a high-pressure system. A pressure of approximately 1,800 psi (at 70 °F) should be indicated on the gauge. (Cylinder pressure will vary considerably with radical temperature changes.)

(1) Check the system by installing one of the mask hose fittings (minus the mask) in each of the cabin wall outlets to determine whether there is a flow. If a demand mask is used, check by breathing through the mask and, if appropriate, clean the mask according to paragraph 9-49d.

(2) Check the complete system for leaks in accordance with the procedure outlined in paragraph 9-49b(2)(d).

(3) If leaks are found, close the cylinder valve and open an outlet to reduce the pressure in the system to zero.

b. The following checks may be made for a pressure drop check of the system.

(1) Open the cylinder valve and pressurize the system. Observe the pressure gauge (a pressure of approximately 1,800 psi at 70 °F should be indicated). For the light weight ICC 3HT 1850 cylinders, pressurize the system to approximately 1,850 psi at 70 °F.

(2) Close the cylinder valve and wait approximately 5 minutes for temperatures to stabilize.

(3) Record the pressure gauge reading and temperature and after 1 hour, record the pressure gauge reading and temperature again.

(4) A maximum pressure drop of 100 psi is permissible.

NOTE: Conduct the above tests in an area where changes of temperature will be less than 10 °F. If a leak occurs during the 1-hour period, suitable corrections would be required, or reconduct the test under conditions of unvarying temperatures.

9-51. SERVICE OXYGEN CYLINDERS. REQUIREMENTS (Ref 49 CFR 173.34 e, 16). Standard-weight cylinders must be hydrostatic tested at the end of each 5-year period (10 years if it meets the requirements in 49 CFR 173.34 e, 16). This is a Department of Transportation (DOT) requirement. These cylinders carry an ICC or DOT 3AA 1800 classification and are suitable for the use intended.

Lightweight cylinders must be hydrostatic tested every 3 years, and must be retired from service after 24 years or 4,380 pressurizations, whichever occurs first. These cylinders carry an ICC or DOT 3 HT 1850 classification and must be stamped with the approval after being inspected. (Ref. 49 CFR 173.34 e, 15).

CAUTION: Use only aviation breathing oxygen when having the oxygen bottle charged.

a. Charging High-Pressure Oxygen Cylinders. The following are recommended procedures for charging high-pressure oxygen cylinders from a manifold system, either permanently-installed or trailer-mounted.

CAUTION: Never attempt to charge a low-pressure cylinder directly from a high-pressure manifold system or cylinder.

(1) Inspection. Do not attempt to charge oxygen cylinders if any of the following discrepancies exist:

(a) Inspect for contaminated fittings on the manifold, cylinder, or outside filler valve. If cleaning is needed, wipe with stabilized trichlorethylene and let air dry. Do not permit the solvent to enter any internal parts.

(b) Check the hydrostatic test date of the cylinder. DOT regulations require ICC or DOT 3AA *1800* designation cylinders to be hydrostatic tested to 5/3 their working pressure, every 5 years (10 years if they meet the requirements in 49 CFR 173.34,e, 16).

Cylinders bearing designation ICC or DOT 3HT *1850* (Ref. 49 CFR 173.34,e, 15) must be hydrostatic tested to 5/3 their working pressure every 3 years, and retired from service 24 years or 4,380 filling cycles after the date of manufacture, whichever occurs first.

(c) If the cylinder is completely empty, do not charge. An empty cylinder must be removed, inspected, and cleaned before charging.

(2) Charging.

(a) Connect the cylinder valve outlet or the outside filler valve to the manifold.

(b) Slowly open the valve of the cylinder to be charged and observe the pressure on the gauge of the manifold system.

(c) Slowly open the valve of the cylinder on the manifold system having the lowest pressure and allow the pressure to equalize.

(d) Close the cylinder valve on the manifold system and slowly open the valve of the cylinder having the next highest pressure. Continue this procedure until the cylinder has been charged in accordance with table 9-5.

(e) Close all valves on the manifold system.

(f) Close the valve on the filled cylinder and remove the cylinder from the manifold.

(g) Using a leak detector, test for leakage around the cylinder valve threaded connections. (If leakage is present, discharge the oxygen and return the cylinder to the facility for repair.)

(h) Let the cylinder stabilize for a period of at least 1 hour, and then recheck the pressure.

(i) Make any necessary adjustments in the pressure.

b. Charging of Low-Pressure Oxygen Systems and Portables. For recharging a low-pressure aircraft oxygen system, or portable cylinders, it is essential that the oxygen trailer or cart have a pressure-reducing regulator. Military types E-2 or C-1 reducing regulators are satisfactory. These types of regulators reduce the large cylinder pressure from 2,000 psi to a line pressure of 450 psi. (A welding pressure-reducing regulator is not satisfactory.)

CAUTION: When refilling the low-pressure system or portable cylinders, open the oxygen filler tank valve slowly to allow the system or portable cylinders to be filled at a slow rate. After the refilling operation is completed, check for leaks with a leak detector. If a leak is detected, paragraph 9-49b(2)(d) should be referred to for corrective action.

CHAPTER 10. WEIGHT AND BALANCE

SECTION 1 TERMINOLOGY

10-1. GENERAL. The removal or addition of equipment results in changes to the center of gravity (c.g.). The empty weight of the aircraft, and the permissible useful load are affected accordingly. Investigate the effects of these changes, since the aircraft flight characteristics may be adversely affected. Information on which to base the record of weight and balance changes to the aircraft may be obtained from the pertinent Aircraft Specifications, Type Certificate Data Sheet (TCDS), prescribed aircraft operating limitations, aircraft flight manual, aircraft weight and balance report, and maintenance manual. Removal of standard parts with negligible weight or addition of minor items of equipment such as nuts, bolts, rivets, washers, and similar standard parts of negligible weight on fixed-wing aircraft do not require a weight and balance check. Rotorcraft are, in general, more critical with respect to control with changes in the c.g. position. Refer to the procedures and instructions in that particular model's maintenance or flight manual.

10-2. TERMINOLOGY. The following terminology is used in the practical application of weight and balance control.

a. Maximum Weight. The maximum weight is the maximum authorized weight of the aircraft and its contents as listed in the specifications.

b. Empty Weight. The empty weight of an aircraft includes all operating equipment that has a fixed location and is actually installed in the aircraft. It includes the weight of the airframe, powerplant, required equipment, optional and special equipment, fixed ballast, full engine coolant, hydraulic fluid, residual fuel, and oil. Additional information regarding fluids that may be contained in the aircraft systems and must be included in the empty weight will be indicated in the pertinent Aircraft Specifications or TCDS.

c. Negligible Weight Change is any change of one pound or less for aircraft whose weight empty is less than 5,000 pounds; two pounds or less for aircraft whose weight empty is more than 5,000 and 50,000 pounds; and five pounds or less for aircraft whose weight empty is more than 50,000 pounds. Negligible c. g. change is any change of less than 0.05% MAC for fixed wing aircraft, 0.2 percent of the maximum allowable c. g. range for rotary wing aircraft.

d. Useful Load. The useful load is the empty weight subtracted from the maximum weight of the aircraft. This load consists of the pilot, crew (if applicable), maximum oil, fuel, passengers, and baggage unless otherwise noted.

e. Weight Check. The weight check consists of checking the sum of the weights of all items of useful load against the authorized useful load (maximum weight less empty weight) of the aircraft.

f. Datum. The datum is an imaginary vertical plane from which all horizontal measurements are taken for balance purposes with the aircraft in level flight attitude. The datum is indicated in most Aircraft Specifications or TCDS. On some of the older aircraft, when the datum is not indicated, any convenient datum may be selected. Once the datum is selected, all moment arms and the location of the permissible c.g. range must be taken with reference to it. Examples of typical locations of the datum are shown in figure 10-1.

g. Arm (or Moment Arm). The arm (or moment arm) is the horizontal distance in inches from the datum to the c.g. of an item. The algebraic sign is plus (+) if measured aft of the datum, and minus (-) if measured forward of the datum. Examples of plus and minus arms are shown in figure 10-2.

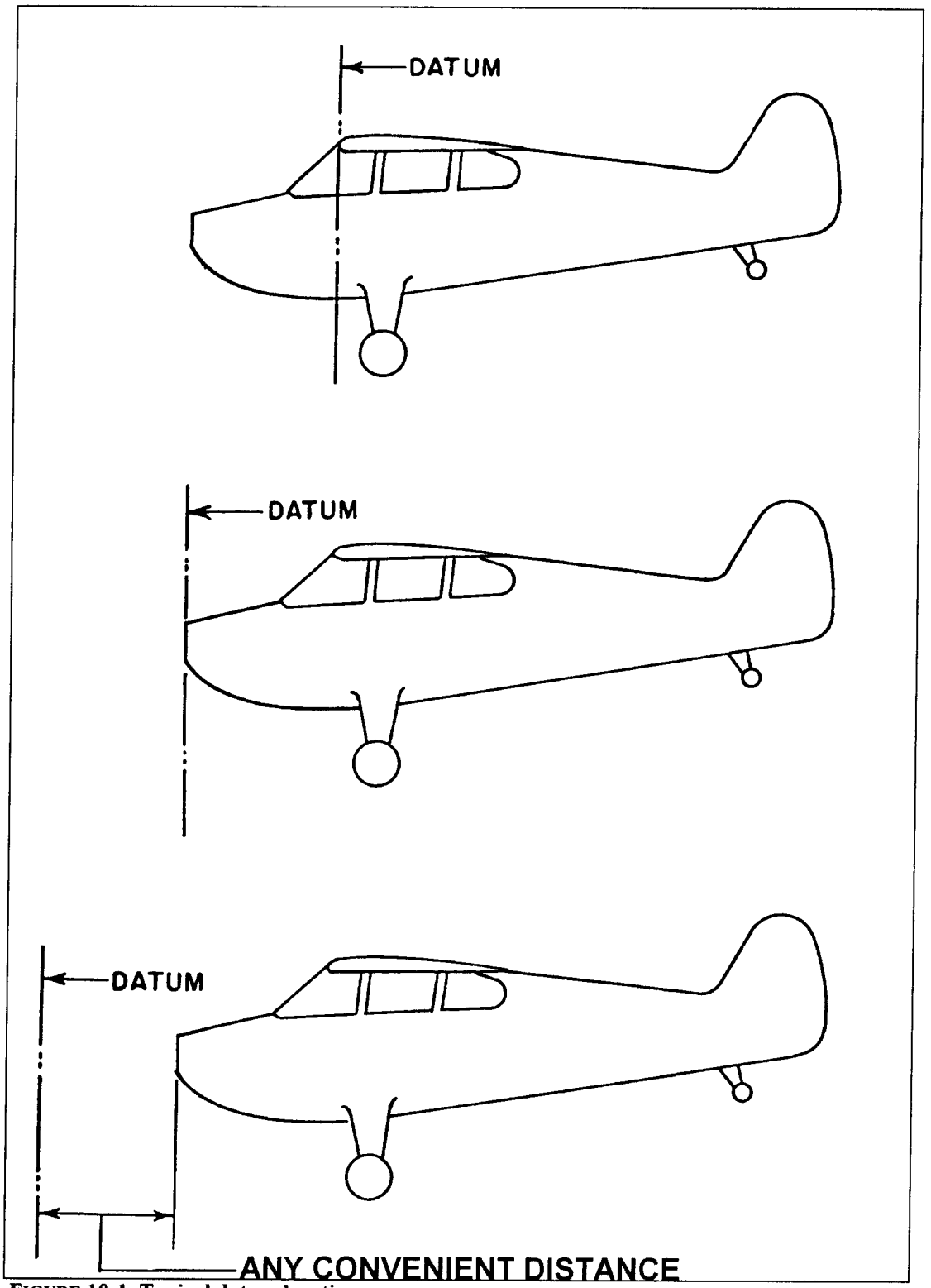

FIGURE 10-1. Typical datum locations.

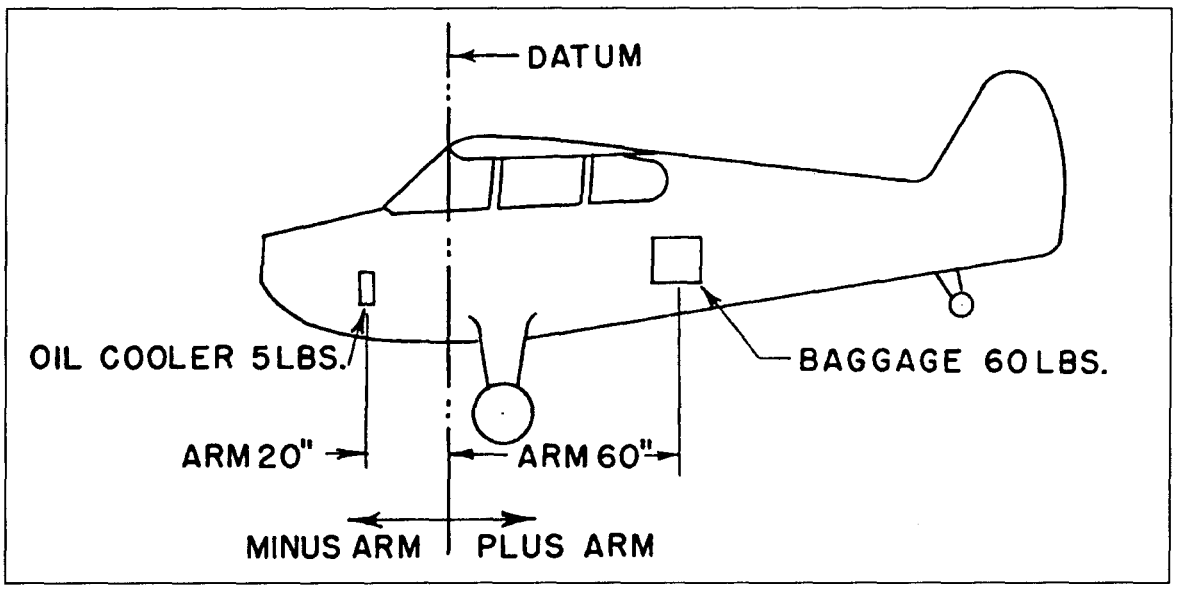

FIGURE 10-2. Illustration of arm (or moment arm).

h. Moment. The moment is the product of a weight multiplied by its arm. The moment of an item about the datum is obtained by multiplying the weight of the item by its horizontal distance from the datum. A typical moment calculation is given in figure 10-3.

i. Center of Gravity. The c.g. is a point about which the nose-heavy and tail-heavy moments are exactly equal in magnitude. If the aircraft is suspended from the c.g., it will not have a tendency to pitch in either direction (nose up or down). The weight of the aircraft (or any object) may be assumed to be concentrated at its c.g. (See figure 10-3.)

j. Empty Weight Center of Gravity. The empty weight c.g. is the c.g. of an aircraft in its empty weight condition, and is an essential part of the weight and balance record. Formulas for determining the c.g. for tail and nosewheel type aircraft are given in figure 10-4. Typical examples of computing the empty weight and empty weight c.g. for aircraft are shown in figures 10-5 and 10-6.

k. Empty Weight Center of Gravity Range. The empty weight c.g. range is determined so that the empty weight c.g. limits will not be exceeded under standard specifications loading arrangements. Calculations as outlined in paragraph 10-16 should be completed when it is possible to load an aircraft in a manner not covered in the Aircraft Specifications or TCDS (extra tanks, extra seats, etc.). The empty weight c.g. range, when applicable, is listed in the Aircraft Specifications or TCDS. Calculation of empty weight c.g. is shown in figures 10-5 and 10-6.

l. Operating Center of Gravity Range. The operating c.g. range is the distance between the forward and rearward c.g. limits indicated in the pertinent Aircraft Specifications or TCDS. These limits are determined for the most forward and most rearward loaded c.g. positions at which the aircraft meets the requirements of Title 14 of the Code of Federal Regulation (14 CFR). The limits are indicated in the specifications in either percent of mean aerodynamic chord (MAC) or inches from the

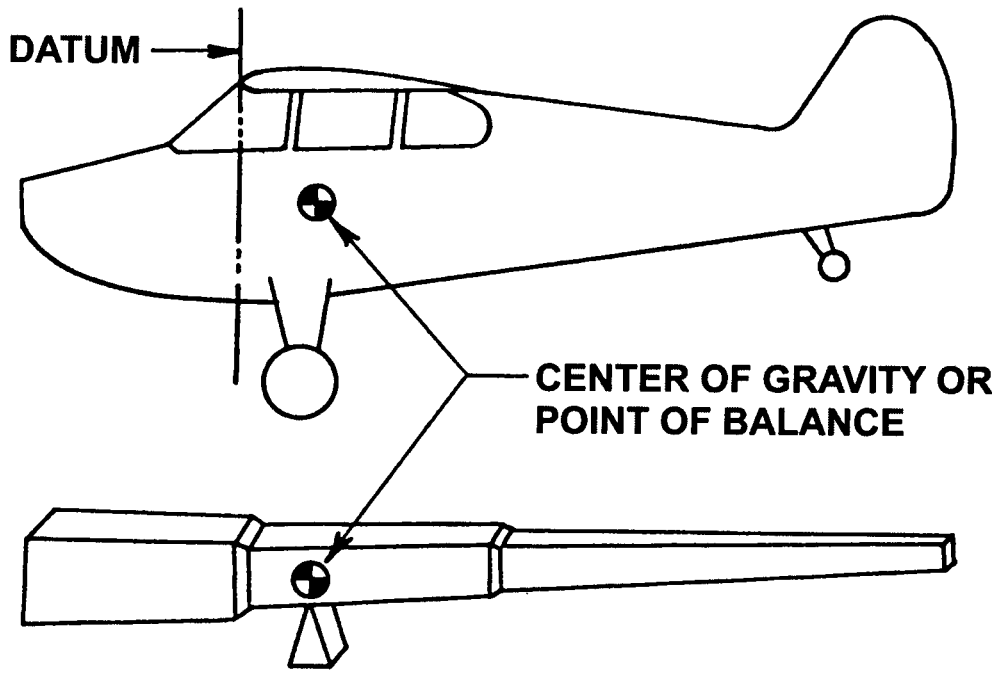

The entire aircraft weight may be considered to be concentrated at the center of gravity. Therefore, the moment of the aircraft about the datum is the weight of the aircraft times the horizontal distance between the C.G. and the datum.

Example: If the weight of this airplane is 2000 lbs. and the arm from the datum to the center of gravity is 16 inches, the moment of the aircraft about the datum is 2000 x 16 or 32,000 in. lbs.

FIGURE 10-3. Example of moment computation.

datum. The c.g. of the loaded aircraft must be within these limits at all times as illustrated in figure 10-7.

m. Mean Aerodynamic Chord (MAC). The MAC is established by the manufacturer who defines its leading edge and its trailing edge in terms of inches from the datum. The c.g. location and various limits are then expressed in percentages of the chord. The location and dimensions of the MAC can be found in the Aircraft Specifications, the TCDS, the aircraft flight manual, or the aircraft weight and balance report.

n. Weighing Point. If the c.g. location is determined by weighing, it is necessary to obtain horizontal measurements between the points on the scale at which the aircraft's weight is concentrated. If weighed using

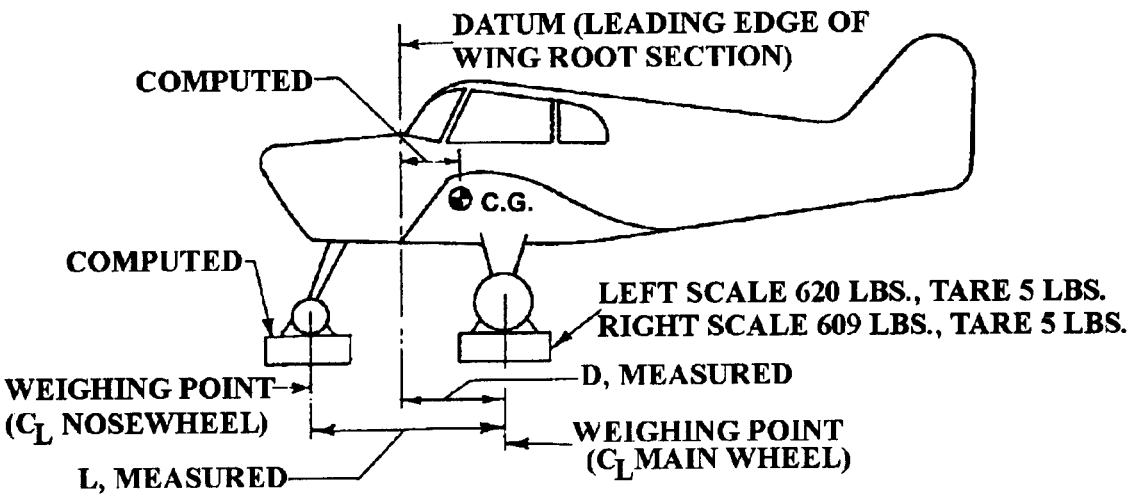

TO FIND: EMPTY WEIGHT AND EMPTY WEIGHT CENTER OF GRAVITY

Datum is the leading edge of the wing (from aircraft specification)
(D) Actual measured horizontal distance from the main wheel weighing point (C_L main wheel) to the Datum ---------- 34.0"
(L) Actual measured horizontal distance from the front wheel weighing point (C_L front wheel) to the main wheel weighing point ---------- 67.8"

SOLVING: EMPTY WEIGHT

Weighing Point	Scale Reading	Tare	Net Weight
Right	609	5	604
Left	620	5	615
Front	464	10	454
Empty Weight (W)			1673

SOLVING: EMPTY WEIGHT CENTER OF GRAVITY

Formula: $C.G. = D - \frac{F \times L}{W} = 34'' - \frac{454 \times 67.8}{1673} = 34'' - 18.4'' = 15.6''$

Reference for formula, Figure 10-4.

FIGURE 10-6. Empty weight and empty weight center of gravity - nosewheel-type aircraft.

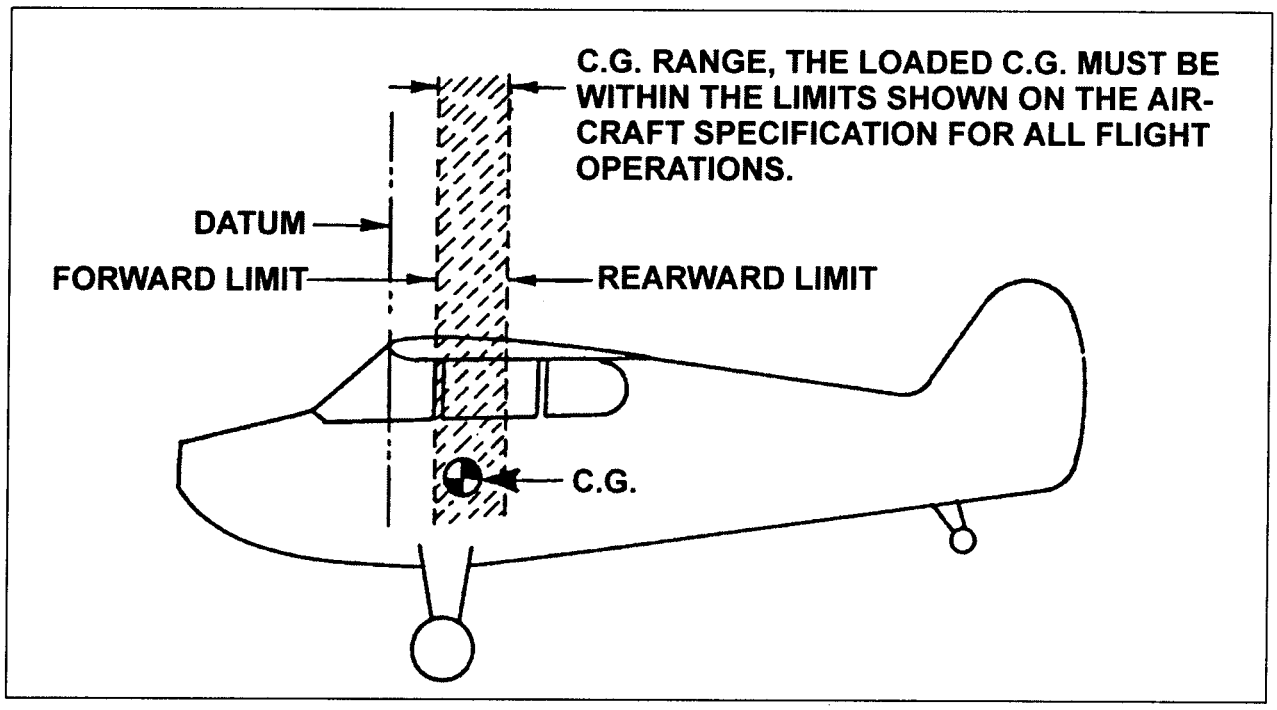

FIGURE 10-7. Operating center of gravity range.

scales under the landing gear tires, a vertical line passing through the centerline of the axle will locate the point on the scale at which the weight is concentrated. This point is called the "weighing point." Other structural locations capable of supporting the aircraft, such as jack pads on the main spar, may also be used if the aircraft weight is resting on the jack pads. Indicate these points clearly in the weight and balance report when used instead of the landing gear. Typical locations of the weighing points are shown in figure 10-8.

o. Zero Fuel Weight. The maximum permissible weight of a loaded aircraft (passengers, crew, cargo, etc.) less its fuel is zero fuel weight. All weights in excess of maximum zero fuel weight must consist of usable fuel.

p. Minimum Fuel. The minimum fuel for balance purposes is 1/12 gallon per maximum-except-take-off horsepower (METO). Minimum fuel is the maximum amount of fuel which can be used in weight and balance computations when low fuel might adversely affect the most critical balance conditions. To determine the weight of fuel in pounds divide the METO horsepower by two.

q. Full Oil. The full oil is the quantity of oil shown in the Aircraft Specifications or TCDS as oil capacity. Use full oil as the quantity of oil when making the loaded weight and balance computations.

r. Tare. The weight of chocks, blocks, stands, etc., used when weighing aircraft is called tare and is included in the scale readings. Tare is deducted from the scale reading at each respective weighing point when tare is involved, to obtain the actual aircraft weight.

SECTION 2 WEIGHING PROCEDURES

10-14. GENERAL. Weighing procedures may vary with the aircraft and the type of weighing equipment employed. The weighing procedures contained in the manufacturer's maintenance manual should be followed for each particular aircraft.

10-15. PROCEDURES. Accepted procedures when weighing an aircraft are:

a. Remove excessive dirt, grease, moisture, etc., from the aircraft before weighing.

b. Weigh the aircraft inside a closed building to prevent error in scale reading due to wind.

c. Determine the empty weight c. g. by placing the aircraft in a level flight attitude.

d. Have all items of equipment that are included in the certificated empty weight report installed in the aircraft when weighing. These items of equipment are a part of the current weight and balance report.

e. The scales should have a current calibration before weighing begins. Zero and use the scales in accordance with the scale manufacturer's instructions. Platform scales and suitable support for the aircraft, if necessary, are usually placed under the wheels of a landplane, the keel of a seaplane float, or the skis of a skiplane. Other structural locations capable of supporting the aircraft, such as jack pads, may be used. Clearly indicate these points and the alternate equipment used in the weight and balance report.

f. Drain the fuel system until the quantity indicator reads *zero* or until the tanks are empty with the aircraft in level flight attitude, unless otherwise noted in the TCDS or Aircraft Specifications. The amount of fuel remaining in the tank, lines, and engine is termed residual fuel and is to be included in the empty weight. In special cases, the aircraft may be weighed with full fuel in tanks provided a definite means of determining the exact weight of the fuel is available.

g. The oil system should be filled to the quantity noted in the TCDS or Aircraft Specifications.

NOTE: On Civil Aeronautics Regulations (CAR-3) Certified Aircraft, the weight of the oil was subtracted mathematically to get the empty weight. In 14 CFR, part 23 aircraft, the weight of the oil is included in the empty weight.

When weighed with full oil, actual empty weight equals the actual recorded weight less the weight of the oil in the oil tank(oil weight = oil capacity in gallons x 7.5 pounds). Indicate on all weight and balance reports whether weights include full oil or oil drained. (See figure 10-9.)

h. Do not set brakes while taking scale reading.

i. Note any tare reading when the aircraft is removed from the scales.

10-15a. REPAIRS AND ALTERATIONS are the major sources of weight changes, and it is the responsibility of the aircraft mechanic making any repairs or alteration to know the weight and location of these changes, and to compute the new CG and record the new empty (EW) weight and EWCG data in the aircraft flight manual.

10-15b. ANNUAL OR 100-HOUR INSPECTION. After conducting an annual or 100-hour inspection, the aircraft mechanic

must ensure the weight and balance data in the aircraft records is current and accurate.

10-16. WEIGHT AND BALANCE COMPUTATIONS. It is often necessary after completing an extensive alteration to establish by computation that the authorized weight and c.g. limits as shown in the TCDS and Aircraft Specifications are not exceeded. Paragraph b(2) explains the significance of algebraic signs used in balance computations.

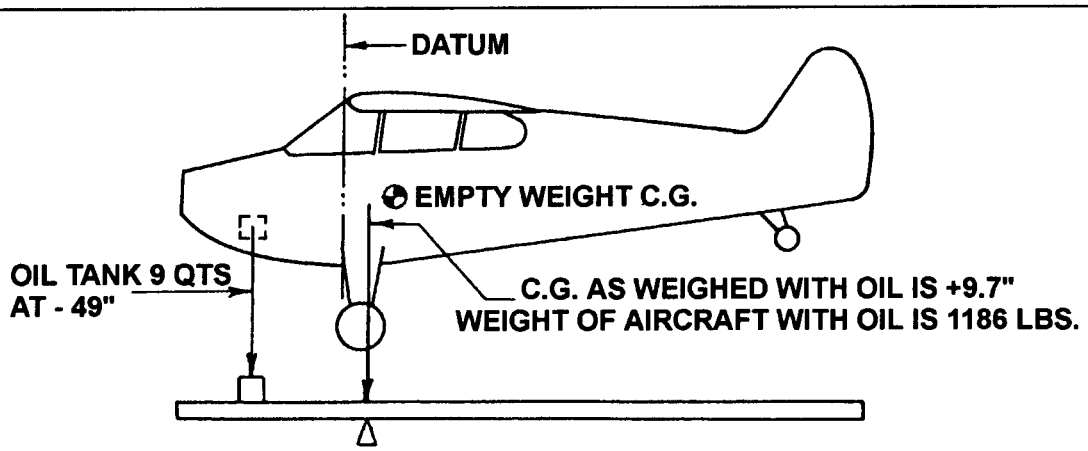

EMPTY WEIGHT AND EMPTY WEIGHT CENTER OF GRAVITY
(when aircraft is weighed with oil)

GIVEN:

Aircraft as weighed with full oil ---------- 1186 lbs.
Center of gravity ---------- 9.7"
Full oil capacity 9 qts. ---------- 17 lbs.

SOLVING:

	Weight #	x Arm"	= Moment "#
Aircraft as weighed	+ 1186	+ 9.7	+ 11504
Less oil	- 17	- 49.0	+ 833
Total	+ 1169(A)		+ 12337(B)

Empty Weight (A) = 1169 pounds

Empty Weight Center of Gravity $\frac{B}{A} = \frac{12337}{1169} = +10.6"$

FIGURE 10-9. Empty weight and empty weight center of gravity when aircraft is weighed with oil.

a. The TCDS or Aircraft Specifications contain the following information relating to the subject:

(1) Center of gravity range.
(2) Empty weight c.g. range when applicable.
(3) Leveling means.
(4) Datum.
(5) Maximum weights.
(6) Number of seats and arm.
(7) Maximum baggage and arm.
(8) Fuel capacity and arm.
(9) Oil capacity and arm.
(10) Equipment items and arm.

b. The TCDS do not list the basic required equipment prescribed by the applicable airworthiness regulations for certification. Refer to the manufacturer's equipment list for such information.

SECTION 3. INSPECTION OF EQUIPMENT INSTALLATION

11-30. GENERAL. When installing equipment which consumes electrical power in an aircraft, it should be determined that the total electrical load can be safely controlled or managed within the rated limits of the affected components of the aircraft's electrical power supply system. Addition of most electrical utilization equipment is a major alteration and requires appropriate FAA approval. The electrical load analysis must be prepared in general accordance with good engineering practices. Additionally, an addendum to the flight manual is generally required.

11-31. INSTALLATION CLEARANCE PROVISIONS. All electrical equipment should be installed so that inspection and maintenance may be performed and that the installation does not interfere with other systems, such as engine or flight controls.

11-32. WIRES, WIRE BUNDLES, AND CIRCUIT PROTECTIVE DEVICES. Before any aircraft electrical load is increased, the new total electrical load (previous maximum load plus added load) must be checked to determine if the design levels are being exceeded. Where necessary, wires, wire bundles, and circuit protective devices having the correct ratings should be added or replaced.

11-33. ALTERNATOR DIODES. Alternators employ diodes for the purpose of converting the alternating current to direct current. These diodes are solid-state electronic devices and are easily damaged by rough handling, abuse, over heating, or reversing the battery connections. A voltage surge in the line, if it exceeds the design value, may destroy the diode. The best protection against diode destruction by voltage surges is to make certain that the battery is never disconnected from the aircraft's electrical system when the alternator is in operation. The battery acts as a large capacitor and tends to damp out voltage surges. The battery must never be connected with reversed polarity as this may subject the diodes to a forward bias condition, allowing very high current conduction that will generally destroy them instantly.

11-34. STATIC ELECTRICAL POWER CONVERTERS. Static power converters employ solid-state devices to convert the aircraft's primary electrical source voltage to a different voltage or frequency for the operation of radio and electronic equipment. They contain no moving parts (with the exception of a cooling fan on some models) and are relatively maintenance free. Various types are available for ac to dc or dc to ac conversion.

a. Location of static converters should be carefully chosen to ensure adequate ventilation for cooling purposes. Heat-radiating fins should be kept clean of dirt and other foreign matter that may impair their cooling properties.

b. Static power converters often emit unacceptable levels of EMI that may disrupt communication equipment and navigation instruments. Properly shielded connectors, terminal blocks, and wires may be required, with all shields well grounded to the airframe.

CAUTION: Do not load converters beyond their rated capacity.

11-35. ACCEPTABLE MEANS OF CONTROLLING OR MONITORING THE ELECTRICAL LOAD.

a. Output Rating. The generator or alternator output ratings and limits prescribed by the manufacturer must be checked against the electrical loads that can be imposed on the affected generator or alternator by installed equipment. When electrical load calculations show that the total continuous electrical load can exceed 80 percent output load limits of the generator or alternator, and where special placards or monitoring devices are not installed, the electrical load must be reduced or the generating capacity of the charging system must be increased. (This is strictly a "rule of thumb" method and should not be confused with an electrical load analysis, which is a complete and accurate analysis, which is a complete and accurate of the composite aircraft power sources and all electrical loads) When a storage battery is part of the electrical power system, the battery will be continuously charged in flight.

b. The use of placards is recommended to inform the pilot and/or crew members of the combination(s) of loads that may be connected to each power source. Warning lights can be installed that will be triggered if the battery bus voltage drops below 13 volts on a 14-volt system or 26 volts on a 28-volt system.

c. For installations where the ammeter is in the battery lead, and the regulator system limits the maximum current that the generator or alternator can deliver, a voltmeter can be installed on the system bus. As long as the ammeter never reads "discharge" (except for short intermittent loads such as operating the gear and flaps) and the voltmeter remains at "system voltage," the generator or alternator will not be overloaded.

d. In installations where the ammeter is in the generator or alternator lead and the regulator system does not limit the maximum current that the generator or alternator can deliver, the ammeter can be redlined at 100 percent of the generator or alternator rating. If the ammeter reading is never allowed to exceed the red line, except for short intermittent loads, the generator or alternator will not be overloaded.

e. Where the use of placards or monitoring devices is not practical or desired, and where assurance is needed that the battery will be charged in flight, the total continuous connected electrical load should be held to approximately 80 percent of the total generator output capacity. When more than one generator is used in parallel, the total rated output is the combined output of the installed generators.

f. When two or more generators and alternators are operated in parallel and the total connected system load can exceed the rated output of a single generator, a method should be provided for quickly coping with a sudden overload that can be caused by generator or engine failure. A quick load reduction system or procedure should be identified whereby the total load can be reduced by the pilot to a quantity within the rated capacity of the remaining operable generator or generators.

11-36. ELECTRICAL LOAD DETERMINATION. The connected load of an aircraft's electrical system may be determined by any one or a combination of several acceptable methods, techniques, or practices. However, those with a need to know the status of a particular aircraft's electrical system should have accurate and up-to-date data concerning the capacity of the installed electrical power source(s) and the load(s) imposed by installed electrical power-consuming devices. Such

data should provide a true picture of the status of the electrical system. New or additional electrical devices should not be installed in an aircraft, nor the capacity changed of any power source, until the status of the electrical system in the aircraft has been determined accurately and found not to adversely affect the integrity of the electrical system.

11-37. JUNCTION BOX CONSTRUCTION. Replacement junction boxes should be fabricated using the same material as the original or from a fire-resistant, nonabsorbent material, such as aluminum, or an acceptable plastic material. Where fire-proofing is necessary, a stainless steel junction box is recommended. Rigid construction will prevent "oil-canning" of the box sides that could result in internal short circuits. In all cases, drain holes should be provided in the lowest portion of the box. Cases of electrical power equipment must be insulated from metallic structure to avoid ground fault related fires. (See paragraph 11-7.)

a. Internal Arrangement. The junction box arrangement should permit easy access to any installed items of equipment, terminals, and wires. Where marginal clearances are unavoidable, an insulating material should be inserted between current carrying parts and any grounded surface. It is not good practice to mount equipment on the covers or doors of junction boxes, since inspection for internal clearance is impossible when the door or cover is in the closed position.

b. Installation. Junction boxes should be securely mounted to the aircraft structure in such a manner that the contents are readily accessible for inspection. When possible, the open side should face downward or at an angle so that loose metallic objects, such as washers or nuts, will tend to fall out of the junction box rather than wedge between terminals.

c. Wiring. Junction box layouts should take into consideration the necessity for adequate wiring space and possible future additions. Electrical wire bundles should be laced or clamped inside the box so that cables do not touch other components, prevent ready access, or obscure markings or labels. Cables at entrance openings should be protected against chafing by using grommets or other suitable means.

11-38.—11-46. [RESERVED.]

SECTION 4. INSPECTION OF CIRCUIT-PROTECTION DEVICES

11-47. GENERAL. All electrical wires must be provided with some means of circuit protection. Electrical wire should be protected with circuit breakers or fuses located as close as possible to the electrical power source bus. Normally, the manufacturer of electrical equipment will specify the fuse or breaker to be used when installing the respective equipment, or SAE publication, ARP 1199, may be referred to for recommended practices.

11-48. DETERMINATION OF CIRCUIT BREAKER RATINGS. Circuit protection devices must be sized to supply open circuit capability. A circuit breaker must be rated so that it will open before the current rating of the wire attached to it is exceeded, or before the cumulative rating of all loads connected to it are exceeded, whichever is lowest. A circuit breaker must always open before any component downstream can overheat and generate smoke or fire. Wires must be sized to carry continuous current in excess of the circuit protective device rating, including its time-current characteristics, and to avoid excessive voltage drop. Refer to section 5 for wire rating methods.

11-49. DC CIRCUIT PROTECTOR CHART. Table 11-3 may be used as a guide for the selection of circuit breaker and fuse rating to protect copper conductor wire. This chart was prepared for the conditions specified. If actual conditions deviate materially from those stated, ratings above or below the values recommended may be justified. For example, a wire run individually in the open air may possibly be protected by the circuit breaker of the next higher rating to that shown on the chart. In general, the chart is conservative for all ordinary aircraft electrical installations.

TABLE 11-3. DC wire and circuit protector chart.

Wire AN gauge copper	Circuit breaker amp.	Fuse amp.
22	5	5
20	7.5	5
18	10	10
16	15	10
14	20	15
12	30	20
10	40	30
8	50	50
6	80	70
4	100	70
2	125	100
1		150
0		150

Basis of chart:
(1) Wire bundles in 135 °F. ambient and altitudes up to 30,000 feet.
(2) Wire bundles of 15 or more wires, with wires carrying no more than 20 percent of the total current carrying capacity of the bundle as given in Specification MIL-W-5088 (ASG).
(3) Protectors in 75 to 85 °F. ambient.
(4) Copper wire Specification MIL-W-5088.
(5) Circuit breakers to Specification MIL-C-5809 or equivalent.
(6) Fuses to Specification MIL-F-15160 or equivalent.

11-50. RESETTABLE CIRCUIT PROTECTION DEVICES.

a. All resettable type circuit breakers must open the circuit irrespective of the position of the operating control when an overload or circuit fault exists. Such circuit breakers are referred to as "trip free."

b. Automatic reset circuit breakers, that automatically reset themselves periodically, are not recommended as circuit protection devices for aircraft.

11-51. CIRCUIT BREAKER USAGE. Circuit breakers are designed as circuit protection for the wire (see paragraph 11-48 and 11-49), not for protection of black boxes

or components. Use of a circuit breaker as a switch is not recommended. Use of a circuit breaker as a switch will decrease the life of the circuit breaker.

11-52. CIRCUIT BREAKER MAINTENANCE. Circuit breakers should be periodically cycled with no load to enhance contact performance by cleaning contaminants from the contact surfaces.

11-53. SWITCHES. In all circuits where a switch malfunction can be hazardous, a switch specifically designed for aircraft service should be used. These switches are of rugged construction and have sufficient contact capacity to break, make, and continuously carry the connected load current. The position of the switch should be checked with an electrical meter.

a. Electrical Switch Inspection. Special attention should be given to electrical circuit switches, especially the spring-loaded type, during the course of normal airworthiness inspection. An internal failure of the spring-loaded type may allow the switch to remain closed even though the toggle or button returns to the "off" position. During inspection, attention should also be given to the possibility that improper switch substitution may have been made.

(1) With the power off suspect aircraft electrical switches should be checked in the ON position for opens (high resistance) and in The OFF position for shorts (low resistance), with an ohmmeter.

(2) Any abnormal side to side movement of the switch should be an alert to imminent failure even if the switch tested was shown to be acceptable with an ohmmeter.

b. Electromechanical Switches. Switches have electrical contacts and various types of switch actuators (i.e., toggle, plunger, push-button, knob, rocker).

(1) Contacts designed for high-level loads must not be subsequently used for low-level applications, unless testing has been performed to establish this capability.

(2) Switches are specifically selected based on the design for the aircraft service current ratings for lamp loads, inductive loads, and motor loads and must be replaced with identical make and model switches.

c. Proximity Switches. These switches are usually solid-state devices that detect the presence of a predetermined target without physical contact and are usually rated 0.5 amps or less.

d. Switch Rating. The nominal current rating of the conventional aircraft switch is usually stamped on the switch housing and represents the continuous current rating with the contacts closed. Switches should be derated from their nominal current rating for the following types of circuits:

(1) Circuits containing incandescent lamps can draw an initial current that is 15 times greater than the continuous current. Contact burning or welding may occur when the switch is closed.

(2) Inductive circuits have magnetic energy stored in solenoid or relay coils that is released when the control switch is opened and may appear as an arc.

(3) Direct-current motors will draw several times their rated current during starting, and magnetic energy stored in their

SECTION 5. ELECTRICAL WIRE RATING

11-66. GENERAL. Wires must be sized so that they: have sufficient mechanical strength to allow for service conditions; do not exceed allowable voltage drop levels; are protected by system circuit protection devices; and meet circuit current carrying requirements.

a. Mechanical Strength of Wires. If it is desirable to use wire sizes smaller than #20, particular attention should be given to the mechanical strength and installation handling of these wires, e.g., vibration, flexing, and termination. Wire containing less than 19 strands must not be used. Consideration should be given to the use of high-strength alloy conductors in small gauge wires to increase mechanical strength. As a general practice, wires smaller than size #20 should be provided with additional clamps and be grouped with at least three other wires. They should also have additional support at terminations, such as connector grommets, strain relief clamps, shrinkable sleeving, or telescoping bushings. They should not be used in applications where they will be subjected to excessive vibration, repeated bending, or frequent disconnection from screw termination.

b. Voltage Drop in Wires. The voltage drop in the main power wires from the generation source or the battery to the bus should not exceed 2 percent of the regulated voltage when the generator is carrying rated current or the battery is being discharged at the 5-minute rate. The tabulation shown in table 11-6 defines the maximum acceptable voltage drop in the load circuits between the bus and the utilization equipment ground.

c. Resistance. The resistance of the current return path through the aircraft structure is generally considered negligible. However, this is based on the assumption that adequate bonding to the structure or a special electric current return path has been provided that is capable of carrying the required electric current with a negligible voltage drop. To determine circuit resistance check the voltage drop across the circuit. If the voltage drop does not exceed the limit established by the aircraft or product manufacturer, the resistance value for the circuit may be considered satisfactory. When checking a circuit, the input voltage should be maintained at a constant value. Tables 11-7 and 11-8 show formulas that may be used to determine electrical resistance in wires and some typical examples.

TABLE 11-6. Tabulation chart (allowable voltage drop between bus and utilization equipment ground).

Nominal system voltage	Allowable voltage drop continuous operation	Intermittent operation
14	0.5	1
28	1	2
115	4	8
200	7	14

d. Resistance Calculation Methods. Figures 11-2 and 11-3 provide a convenient means of calculating maximum wire length for the given circuit current.

(1) Values in tables 11-7 and 11-8 are for tin-plated copper conductor wires. Because the resistance of tin-plated wire is slightly higher than that of nickel or silver-plated wire, maximum run lengths determined from these charts will be slightly less than the allowable limits for nickel or silver-plated copper wire and are therefore safe to use. Figures 11-2 and 11-3 can be used to derive slightly longer maximum run lengths for silver or nickel-plated wires by multiplying the maximum run length by the ratio of resistance of tin-plated wire, divided by the resistance of silver or nickel-plated wire.

TABLE 11-7. Examples of determining required tin-plated copper wire size and checking voltage drop using figure 11-2

Voltage drop	Run Lengths (Feet)	Circuit Current (Amps)	Wire Size From Chart	Check-calculated voltage drop (VD)= (Resistance/Ft) (Length) (Current)
1	107	20	No. 6	VD= (.00044 ohms/ft) (107)(20)= 0.942
0.5	90	20	No. 4	VD= (.00028 ohms/ft) (90)(20)= 0.504
4	88	20	No. 12	VD= (.00202 ohms/ft) (88)(20)= 3.60
7	100	20	No. 14	VD= (.00306 ohms/ft) (100)(20)= 6.12

TABLE 11-8. Examples of determining maximum tin-plated copper wire length and checking voltage drop using figure 11-2.

Maximum Voltage drop	Wire Size	Circuit Current (Amps)	Maximum Wire Run Length (Feet)	Check-calculated voltage drop (VD)= (Resistance/Ft) (Length) (Current)
1	No. 10	20	39	VD= (.00126 ohms/ft) (39)(20)= .98
0.5	—		19.5	VD= (.00126 ohms/ft) (19.5)(20)= .366
4	—		156	VD= (.00126 ohms/ft) (156)(20)= 3.93
7	—		273	VD= (.00126 ohms/ft) (273)(20)= 6.88

(2) As an alternative method or a means of checking results from figure 11-2, continuous flow resistance for a given wire size can be read from table 11-9 and multiplied by the wire run length and the circuit current. For intermittent flow, use figure 11-3.

(3) Voltage drop calculations for aluminum wires can be accomplished by multiplying the resistance for a given wire size, defined in table 11-10, by the wire run length and circuit current.

(4) When the estimated or measured conductor temperature (T2) exceeds 20 °C, such as in areas having elevated ambient temperatures or in fully loaded power-feed wires, the maximum allowable run length (L2), must be shortened from L1 (the 20 °C value) using the following formula for copper conductor wire:

$$L_2 = \frac{(254.5\,°C)(L_1)}{(234.5\,°C)+)(T_2)}$$

For aluminum conductor wire, the formula is:

$$L_2 = \frac{(258.1\,°C)(L_1)}{(238.1\,°C)+(T_2)}$$

These formulas use the reciprocal of each material's resistively temperature coefficient to take into account increased conductor resistance resulting from operation at elevated temperatures.

(5) To determine T2 for wires carrying a high percentage of their current carrying capability at elevated temperatures, laboratory testing using a load bank and a high-temperature chamber is recommended. Such tests should be run at anticipated worse case ambient temperature and maximum current-loading combinations.

(6) Approximate T2 can be estimated using the following formula:

$$T_2 = T_1 + (T_R - T_1)(\sqrt{I_2 / I_{max}})$$

Where:

T_1 = Ambient Temperature
T_2 = Estimated Conductor Temperature
T_R = Conductor Temperature Rating
I_2 = Circuit Current (A=Amps)
I_{max} = Maximum Allowable Current (A=Amps) at T_R

This formula is quite conservative and will typically yield somewhat higher estimated temperatures than are likely to be encountered under actual operating conditions.

Note: Aluminum wire-From Table 11-9 and 11-10 note that the conductor resistance of aluminum wire and that of copper wire (two numbers higher) are similar. Accordingly, the electric wire current in Table 11-9 can be used when it is desired to substitute aluminum wire and the proper size can be selected by reducing the copper wire size by two numbers and referring to Table 11-10. The use of aluminum wire size smaller than No. 8 is not recommended.

TABLE 11-9. Current carrying capacity and resistance of copper wire.

Wire Size	Continuous duty current (amps)-Wires in bundles, groups, harnesses, or conduits. (See Note #1) Wire Conductor Temperature Rating			Max. resistance ohms/1000ft@20 °C tin plated conductor (See Note #2)	Nominal conductor area - circ.mils
	105 °C	150 °C	200 °C		
24	2.5	4	5	28.40	475
22	3	5	6	16.20	755
20	4	7	9	9.88	1,216
18	6	9	12	6.23	1,900
16	7	11	14	4.81	2,426
14	10	14	18	3.06	3,831
12	13	19	25	2.02	5,874
10	17	26	32	1.26	9,354
8	38	57	71	0.70	16,983
6	50	76	97	0.44	26,818
4	68	103	133	0.28	42,615
2	95	141	179	0.18	66,500
1	113	166	210	0.15	81,700
0	128	192	243	0.12	104,500
00	147	222	285	0.09	133,000
000	172	262	335	0.07	166,500
0000	204	310	395	0.06	210,900

Note #1: Rating is for 70°C ambient, 33 or more wires in the bundle for sizes 24 through 10, and 9 wires for size 8 and larger, with no more than 20 percent of harness current carrying capacity being used, at an operating altitude of 60,000 feet. For rating of wires under other conditions or configurations see paragraph 11-69.

Note #2: For resistance of silver or nickel-plated conductors see wire specifications.

TABLE 11-10. Current carrying capacity and resistance of aluminum wire.

Wire Size	Continuous duty current (amps) Wires in bundles, groups or harnesses or conduits (See table 11-9 Note #1)		Max. resistance ohms/1000ft
	Wire conductor temperature rating		@ 20 °C
	105 °C	150 °C	
8	30	45	1.093
6	40	61	0.641
4	54	82	0.427
2	76	113	0.268
1	90	133	0.214
0	102	153	0.169
00	117	178	0.133
000	138	209	0.109
0000	163	248	0.085
Note: Observe design practices described in paragraph 11-67 for aluminum conductor			

11-67. METHODS FOR DETERMINING CURRENT CARRYING CAPACITY OF WIRES. This paragraph contains methods for determining the current carrying capacity of electrical wire, both as a single wire in free air and when bundled into a harness. It presents derating factors for altitude correction and examples showing how to use the graphical and tabular data provided for this purpose. In some instances, the wire may be capable of carrying more current than is recommended for the contacts of the related connector. In this instance, it is the contact rating that dictates the maximum current to be carried by a wire. Wires of larger gauge may need to be used to fit within the crimp range of connector contacts that are adequately rated for the current being carried. Figure 11-5 gives a family of curves whereby the bundle derating factor may be obtained.

a. Effects of Heat Aging on Wire Insulation. Since electrical wire may be installed in areas where inspection is infrequent over extended periods of time, it is necessary to give special consideration to heat-aging characteristics in the selection of wire. Resistance to heat is of primary importance in the selection of wire for aircraft use, as it is the basic factor in wire rating. Where wire may be required to operate at higher temperatures due either to high ambient temperatures, high-current loading, or a combination of the two, selection should be made on the basis of satisfactory performance under the most severe operating conditions.

b. Maximum Operating Temperature. The current that causes a temperature steady state condition equal to the rated temperature of the wire should not be exceeded. Rated temperature of the wire may be based upon the ability of either the conductor or the insulation to withstand continuous operation without degradation.

c. Single Wire in Free Air. Determining a wiring system's current carrying capacity begins with determining the maximum current that a given-sized wire can carry without exceeding the allowable temperature difference (wire rating minus ambient °C). The curves are based upon a single copper wire in free air. (See figures 11-4a and 11-4b.)

d. Wires in a Harness. When wires are bundled into harnesses, the current derived for a single wire must be reduced as shown in figure 11-5. The amount of current derating is a function of the number of wires in the bundle and the percentage of the total wire bundle capacity that is being used.

e. Harness at Altitude. Since heat loss from the bundle is reduced with increased altitude, the amount of current should be derated. Figure 11-6 gives a curve whereby the altitude-derating factor may be obtained.

f. Aluminum Conductor Wire. When aluminum conductor wire is used, sizes should be selected on the basis of current ratings shown in table 11-10. The use of sizes smaller than #8 is discouraged (Ref. AS50881A). Aluminum wire should not be attached to engine mounted accessories or used in areas having corrosive fumes, severe vibration, mechanical stresses, or where there is a need for frequent disconnection. Use of aluminum wire is also discouraged for runs of less than 3 feet (AS50991A). Termination hardware should be of the type specifically designed for use with aluminum conductor wiring.

11-68. INSTRUCTIONS FOR USE OF ELECTRICAL WIRE CHART.

a. Correct Size. To select the correct size of electrical wire, two major requirements must be met:

(1) The wire size should be sufficient to prevent an excessive voltage drop while carrying the required current over the required distance. (See table 11-6, Tabulation Chart, for allowable voltage drops.)

(2) The size should be sufficient to prevent overheating of the wire carrying the required current. (See paragraph 11-69 for allowable current carrying calculation methods.)

b. Two Requirements. To meet the two requirements (see paragraph 11-66b) in selecting the correct wire size using figure 11-2 or figure 11-3, the following must be known:

(1) The wire length in feet.

(2) The number of amperes of current to be carried.

(3) The allowable voltage drop permitted.

(4) The required continuous or intermittent current.

(5) The estimated or measured conductor temperature.

(6) Is the wire to be installed in conduit and/or bundle?

(7) Is the wire to be installed as a single wire in free air?

c. Example No. 1. Find the wire size in figure 11-2 using the following known information:

(1) The wire run is 50 feet long, including the ground wire.

(2) Current load is 20 amps.

(3) The voltage source is 28 volts from bus to equipment.

(4) The circuit has continuous operation.

(5) Estimated conductor temperature is 20 °C or less.

The scale on the left of the chart represents maximum wire length in feet to prevent an excessive voltage drop for a specified voltage source system (e.g., 14V, 28V, 115V, 200V). This voltage is identified at the top of scale and the corresponding voltage drop limit for continuous operation at the bottom. The scale (slant lines) on top of the chart represents amperes. The scale at the bottom of the chart represents wire gauge.

STEP 1: From the left scale find the wire length, 50 feet under the 28V source column.

STEP 2: Follow the corresponding horizontal line to the right until it intersects the slanted line for the 20-amp load.

STEP 3: At this point, drop vertically to the bottom of the chart. The value falls between No. 8 and No. 10. Select the next larger size wire to the right, in this case No. 8. This is the smallest size wire that can be used without exceeding the voltage drop limit expressed at the bottom of the left scale. This example is plotted on the wire chart, figure 11-2. Use figure 11-2 for continuous flow and figure 11-3 for intermittent flow.

d. Procedures in Example No. 1 paragraph 11-68c, can be used to find the wire size for any continuous or intermittent operation (maximum two minutes). Voltage (e.g. 14 volts, 28 volts, 115 volts, 200 volts) as indicated on the left scale of the wire chart in figure 11-2 and 11-3.

e. Example No. 2. Using figure 11-2, find the wire size required to meet the allowable voltage drop in table 11-6 for a wire car-

rying current at an elevated conductor temperature using the following information:

(1) The wire run is 15.5 feet long, including the ground wire.

(2) Circuit current (I2) is 20 amps, continuous.

(3) The voltage source is 28 volts.

(4) The wire type used has a 200 °C conductor rating and it is intended to use this thermal rating to minimize the wire gauge. Assume that the method described in paragraph 11-66d(6) was used and the minimum wire size to carry the required current is #14.

(5) Ambient temperature is 50 °C under hottest operating conditions.

f. Procedures in example No. 2.

STEP 1: Assuming that the recommended load bank testing described in paragraph 11-66d(5) is unable to be conducted, then the estimated calculation methods outlined in paragraph 11-66d(6) may be used to determine the estimated maximum current (Imax). The #14 gauge wire mentioned above can carry the required current at 50 °C ambient (allowing for altitude and bundle derating).

(1) Use figure 11-4a to calculate the Imax a #14 gauge wire can carry.

Where:

T_2 = estimated conductor temperature

T_1 = 50 °C ambient temperature

T_R = 200 °C maximum conductor rated temperature

(2) Find the temperature differences (T_R-T_1) = (200 °C-50 °C) = 150 °C.

(3) Follow the 150 °C corresponding horizontal line to intersect with #14 wire size, drop vertically and read 47 Amps at bottom of chart (current amperes).

(4) Use figure 11-5, left side of chart reads 0.91 for 20,000 feet, multiple 0.91 x 47 Amps = 42.77 Amps.

(5) Use figure 11-6, find the derate factor for 8 wires in a bundle at 60 percent. First find the number of wires in the bundle (8) at bottom of graph and intersect with the 60 percent curve meet. Read derating factor, (left side of graph) which is 0.6. Multiply 0.6 x 42.77 Amps = 26 Amps.

I_{max} = 26 amps (this is the maximum current the #14 gauge wire could carry at 50°C ambient

L_1=15.5 feet maximum run length for size #14 wire carrying 20 amps from figure 11-2

STEP 2: From paragraph 11-66d (5) and (6), determine the T_2 and the resultant maximum wire length when the increased resistance of the higher temperature conductor is taken into account.

$$T_2 = T_1 + (T_R - T_1)\left(\sqrt{I_2 / I_{max}}\right)$$

$$T_2 = 50\ ^\circ C + (200\ ^\circ C - 50\ ^\circ C)(\sqrt{20A/26A}$$
$$= 50\ °C + (150\ °C)(.877)$$
$$T_2 = 182\ °C$$

$$L_2 = \frac{(254.5\ °C)(L_1)}{(234.5\ °C) + (T_2)} =$$

$$L_2 = \frac{(254.5\ °C)(15.5Ft)}{(234.5\ °C) + (182\ °C)}$$

$$L_2 = 9.5\ ft$$

The size #14 wire selected using the methods outlined in paragraph 11-66d is too small to meet the voltage drop limits from figure 11-2 for a 15.5 feet long wire run.

STEP 3: Select the next larger wire (size #12) and repeat the calculations as follows:

L_1=24 feet maximum run length for 12 gauge wire carrying 20 amps from figure 11-2.

I_{max} = 37 amps (this is the maximum current the size #12 wire can carry at 50 °C ambient. Use calculation methods outlined in paragraph 11-69 and figure 11-4a.

$$T_2 = 50\ °C + (200\ °C - 50\ °C)(\sqrt{20A/37A} =$$

$$50\ °C + (150\ °C)(-540) = 131\ °C$$

$$L_2 = \frac{254.5\ °C(L_1)}{234.5\ °C + (T_2)}$$

$$L_2 = \frac{(254.5\ °C)(24ft)}{(234.5\ °C) + (131\ °C)} = \frac{6108}{366}$$

$$L_2 = \frac{(254.5\ °C)(24ft)}{366} = 16.7\ ft$$

The resultant maximum wire length, after adjusting downward for the added resistance associated with running the wire at a higher temperature, is 15.4 feet, which will meet the original 15.5 foot wire run length requirement without exceeding the voltage drop limit expressed in figure 11-2.

11-69. COMPUTING CURRENT CARRYING CAPACITY.

a. Example 1. Assume a harness (open or braided), consisting of 10 wires, size #20, 200 °C rated copper and 25 wires, size #22, 200 °C rated copper, will be installed in an area where the ambient temperature is 60 °C and the vehicle is capable of operating at a 60,000-foot altitude. Circuit analysis reveals that 7 of the 35 wires in the bundle (7/35 = 20 percent) will be carrying power currents nearly at or up to capacity.

STEP 1: Refer to the "single wire in free air" curves in figure 11-4a. Determine the change of temperature of the wire to determine free air ratings. Since the wire will be in an ambient of 60 °C and rated at 200° C, the change of to temperature is 200 °C - 60 °C = 140 °C. Follow the 140 °C temperature difference horizontally until it intersects with wire size line on figure 11-4a. The free air rating for size #20 is 21.5 amps, and the free air rating for size #22 is 16.2 amps.

STEP 2: Refer to the "bundle derating curves" in figure 11-5, the 20 percent curve is selected since circuit analysis indicate that 20 percent or less of the wire in the harness would be carrying power currents and less than 20 percent of the bundle capacity would be used. Find 35 (on the abscissa) since there are 35 wires in the bundle and determine a derating factor of 0.52 (on the ordinate) from the 20 percent curve.

STEP 3: Derate the size #22 free air rating by multiplying 16.2 by 0.52 to get 8.4 amps in-harness rating. Derate the size #20 free air-rating by multiplying 21.5 by 0.52 to get 11.2 amps in-harness rating.

STEP 4: Refer to the "altitude derating curve" of figure 11-6, look for 60,000 feet (on the abscissa) since that is the altitude at which the vehicle will be operating. Note that the wire must be derated by a factor of 0.79 (found on the ordinate). Derate the size #22 harness rating by multiplying 8.4 amps by 0.79 to get 6.6 amps. Derate the size #20 harness rating by multiplying 11.2 amps by 0.79 to get 8.8 amps.

STEP 5: To find the total harness capacity, multiply the total number of size #22 wires by the derated capacity (25 x 6.6 = 165.0 amps)

and add to that the number of size #20 wires multiplied by the derated capacity (10 x 8.8 = 88 amps) and multiply the sum by the 20 percent harness capacity factor. Thus, the total harness capacity is (165.0 + 88.0) x 0.20 = 50.6 amps. It has been determined that the total harness current should not exceed 50.6 A, size #22 wire should not carry more than 6.6 amps and size #20 wire should not carry more than 8.8 amps.

STEP 6: Determine the actual circuit current for each wire in the bundle and for the whole bundle. If the values calculated in step #5 are exceeded, select the next larger size wire and repeat the calculations.

b. Example 2. Assume a harness (open or braided), consisting of 12, size #12, 200 °C rated copper wires, will be operated in an ambient of 25 °C at sea level and 60 °C at a 20,000-foot altitude. All 12 wires will be operated at or near their maximum capacity.

STEP 1: Refer to the "single wire in free air" curve in figure 11-4a, determine the temperature difference of the wire to determine free air ratings. Since the wire will be in ambient of 25 °C and 60 °C and is rated at 200 °C, the temperature differences are 200 °C-25 °C = 175 °C and 200 °C-60 °C = 140 °C respectively. Follow the 175 °C and the 140 °C temperature difference lines
on figure 11-4a until each intersects wire size line, the free air ratings of size #12 are 68 amps and 61 amps, respectively.

STEP 2: Refer to the "bundling derating curves" in figure 11-5, the 100 percent curve is selected because we know all 12 wires will be carrying full load. Find 12 (on the abscissa) since there are 12 wires in the bundle and determine a derating factor of 0.43 (on the ordinate) from the 100 percent curve.

STEP 3: Derate the size #12 free air ratings by multiplying 68 amps and 61 amps by 0.43 to get 29.2 amps and 26.2 amps, respectively.

STEP 4: Refer to the "altitude derating curve" of figure 11-6, look for sea level and 20,000 feet (on the abscissa) since these are the conditions at which the load will be carried. The wire must be derated by a factor of 1.0 and 0.91, respectively.

STEP 5: Derate the size #12 in a bundle ratings by multiplying 29.2 amps at sea level and 26.6 amps at 20,000 feet by 1.0 and 0.91, respectively, to obtained 29.2 amps and 23.8 amps. The total bundle capacity at sea level and 25 °C ambient is 29.2x12=350.4 amps. At 20,000 feet and 60 °C ambient the bundle capacity is 23.8x12=285.6 amps. Each size #12 wire can carry 29.2 amps at sea level, 25 °C ambient or 23.8 amps at 20,000 feet, and 60 °C ambient.

STEP 6: Determine the actual circuit current for each wire in the bundle and for the bundle. If the values calculated in Step #5 are exceeded, select the next larger size wire and repeat the calculations.

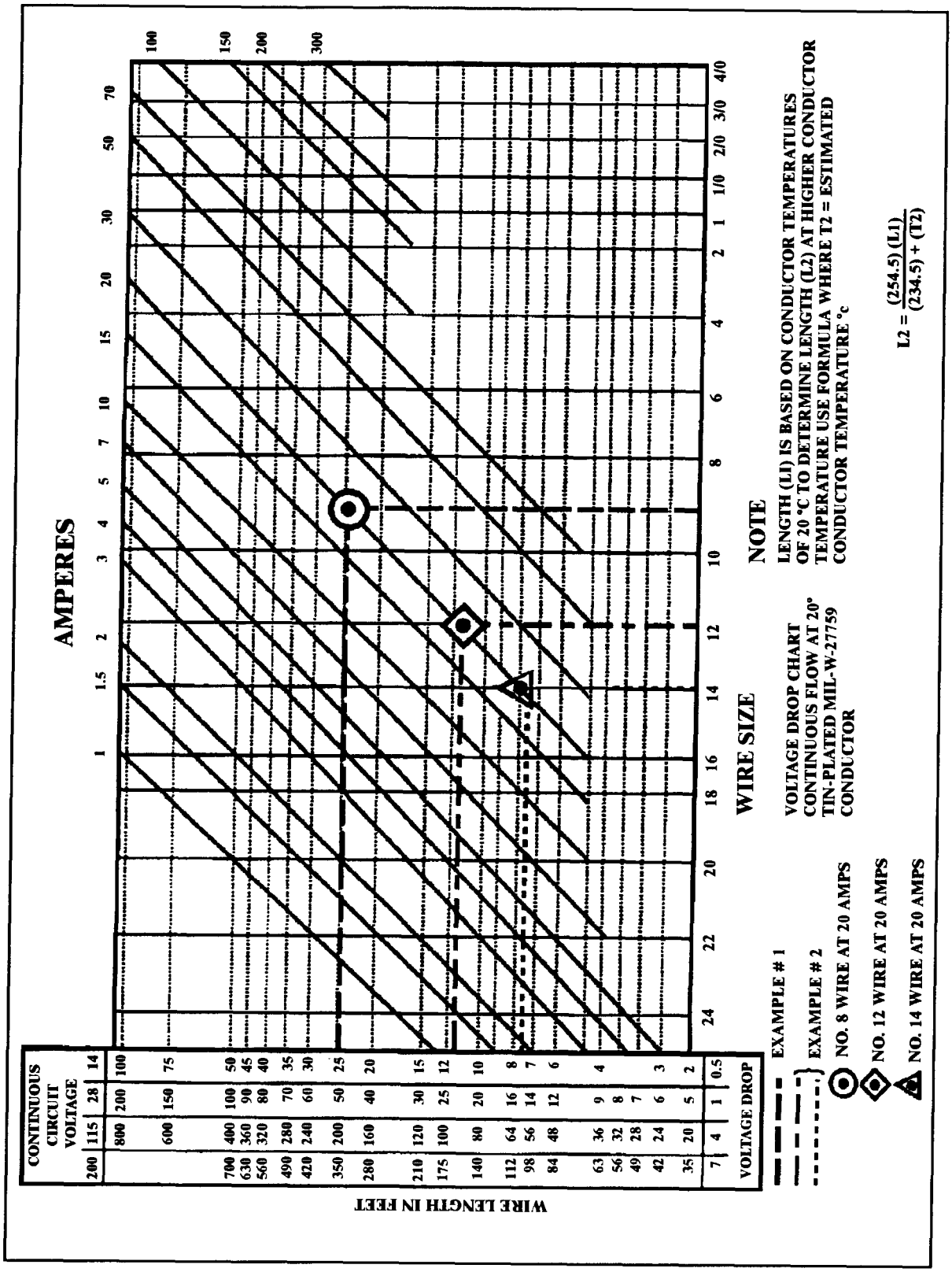

FIGURE 11-2. Conductor chart, continuous flow.

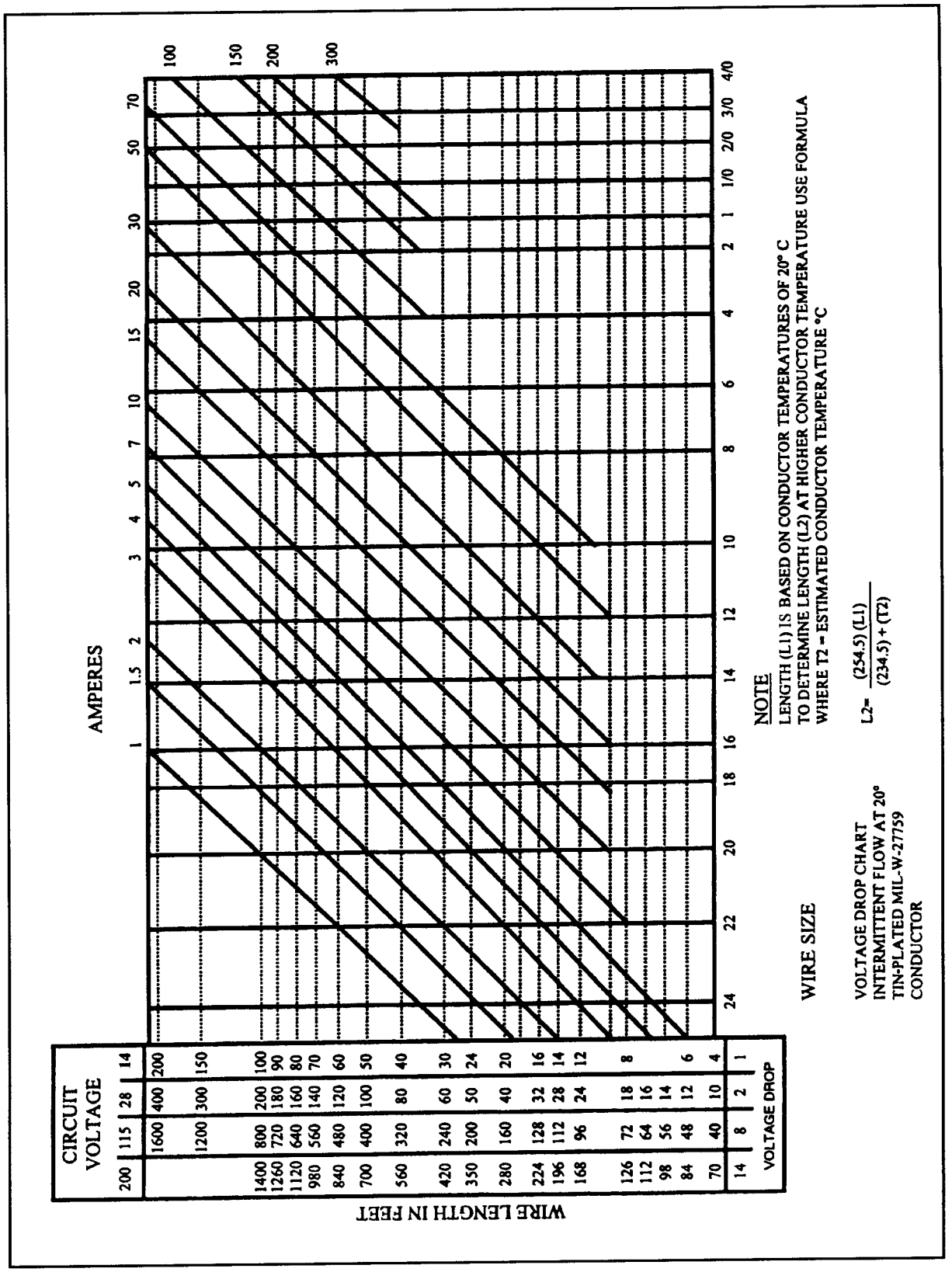

FIGURE 11-3. Conductor chart, intermittent flow.

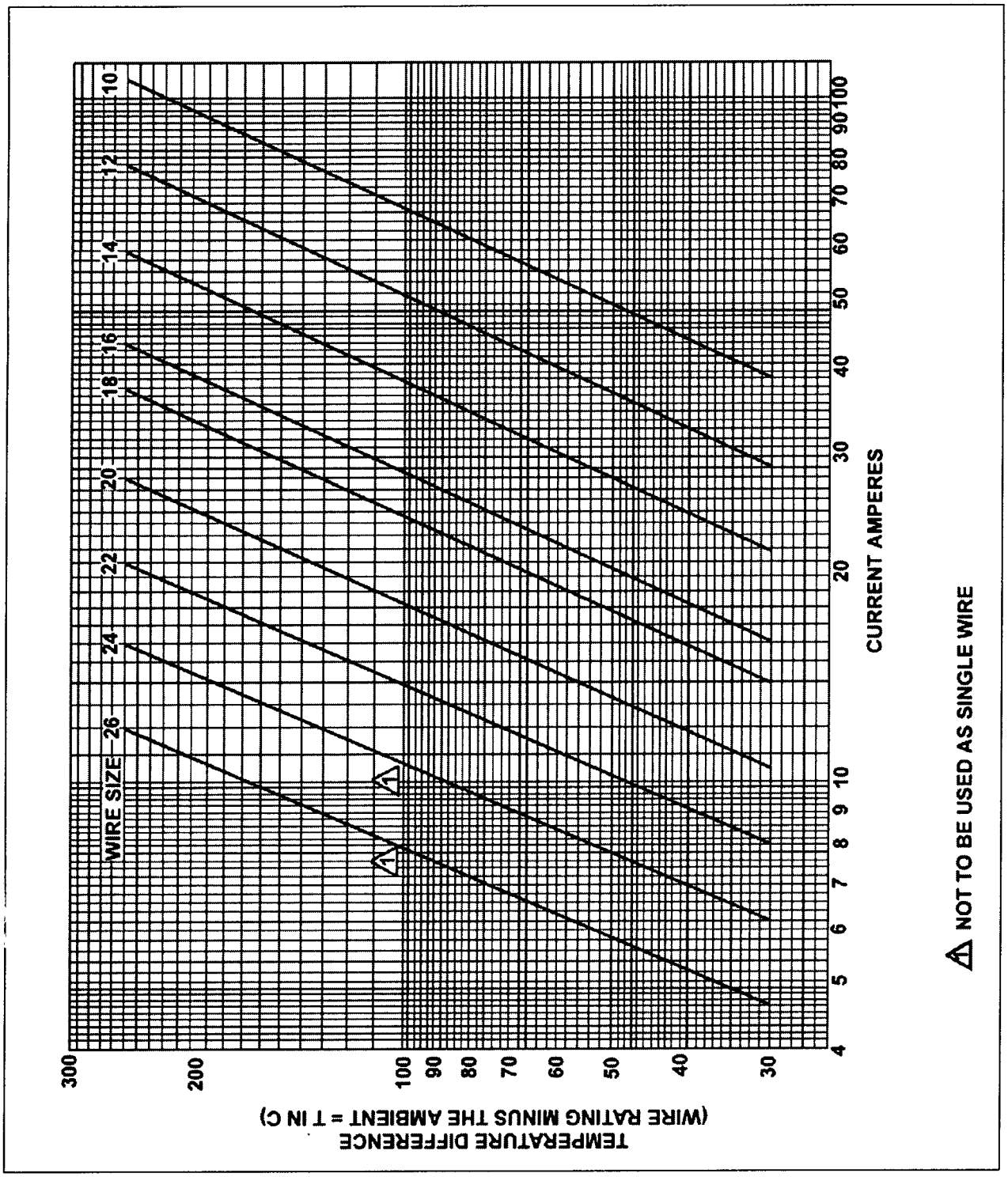

FIGURE 11-4a. Single copper wire in free air.

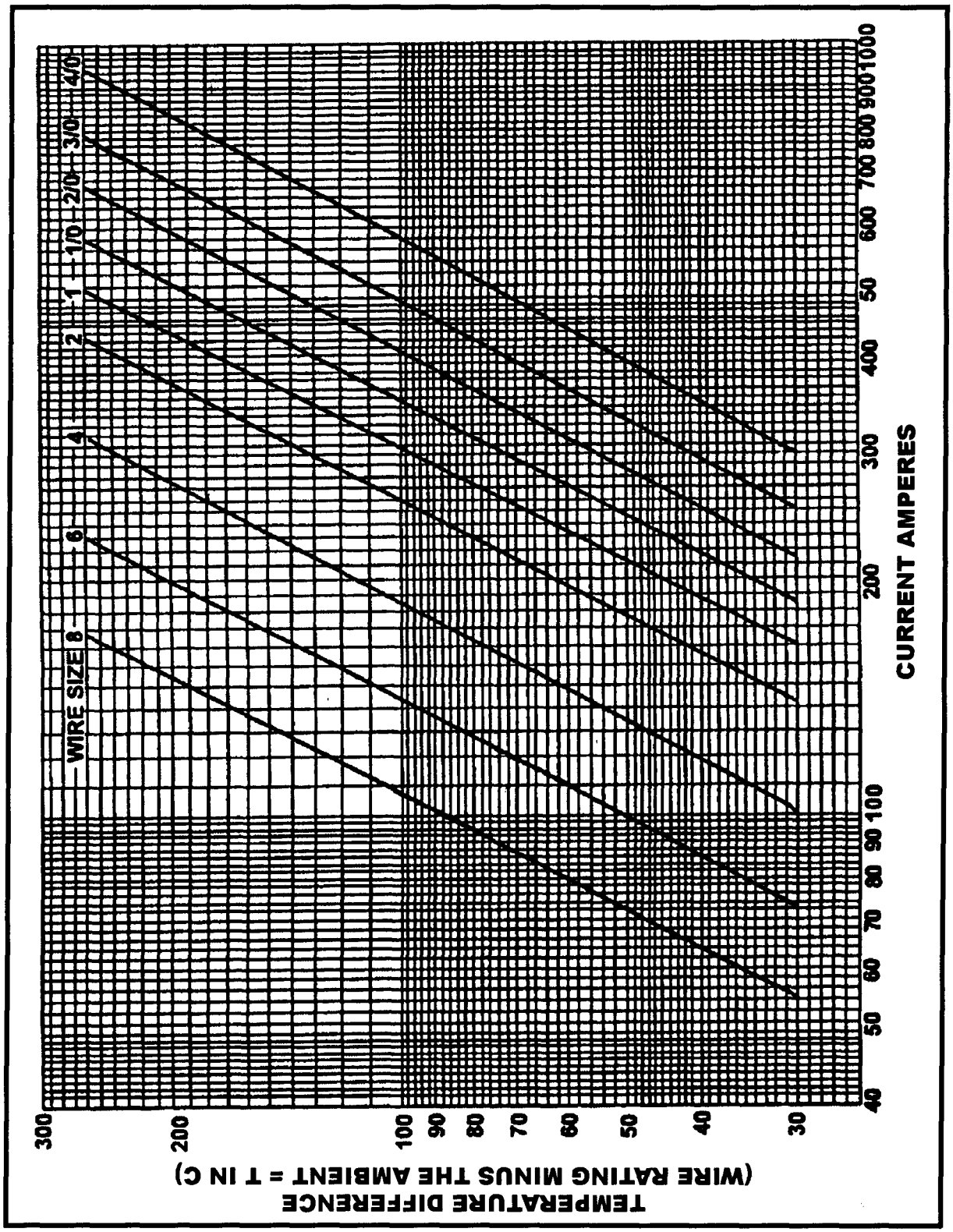

FIGURE 11-4b. Single copper wire in free air.

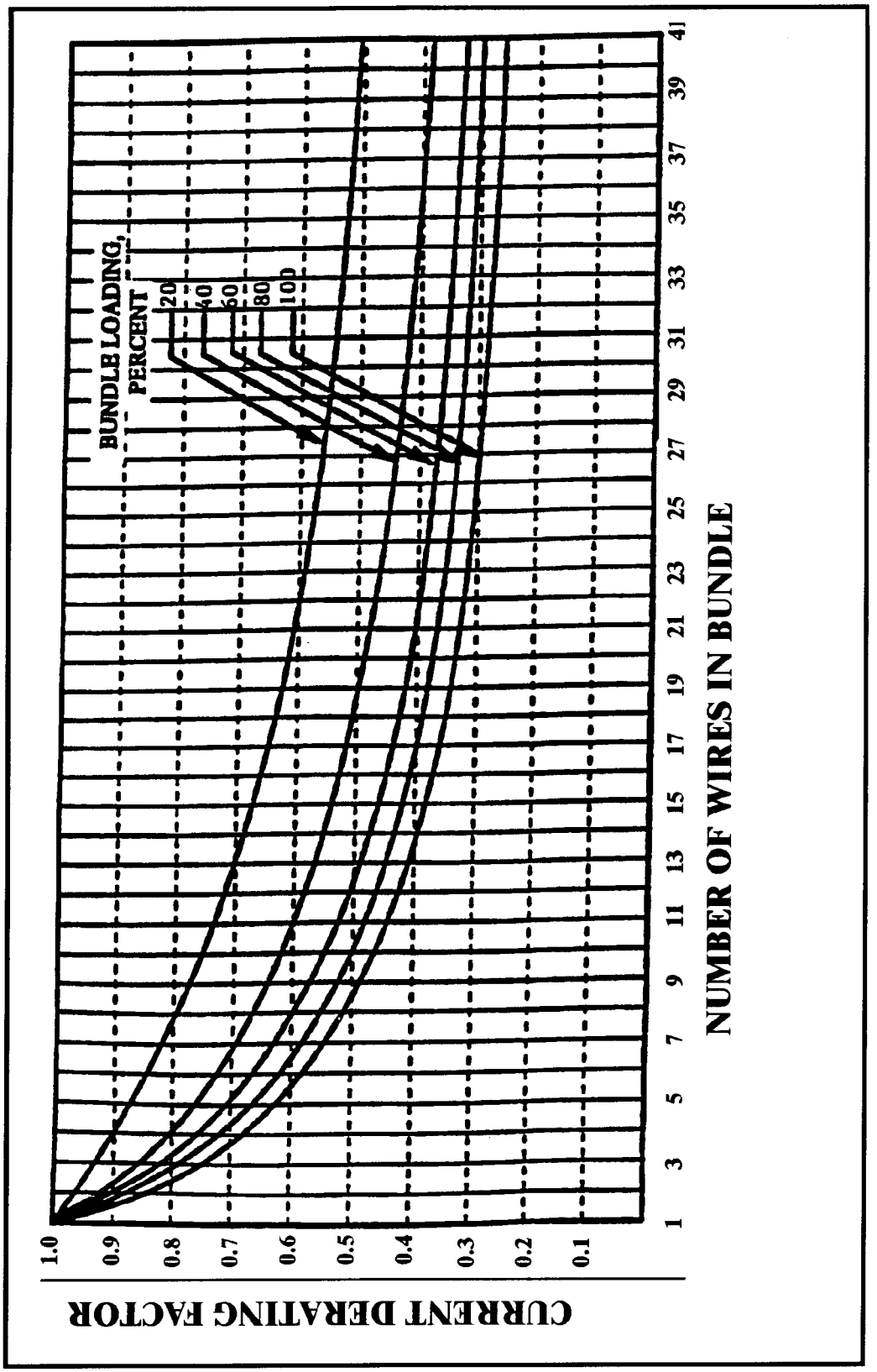

FIGURE 11-5. Bundle derating curves.

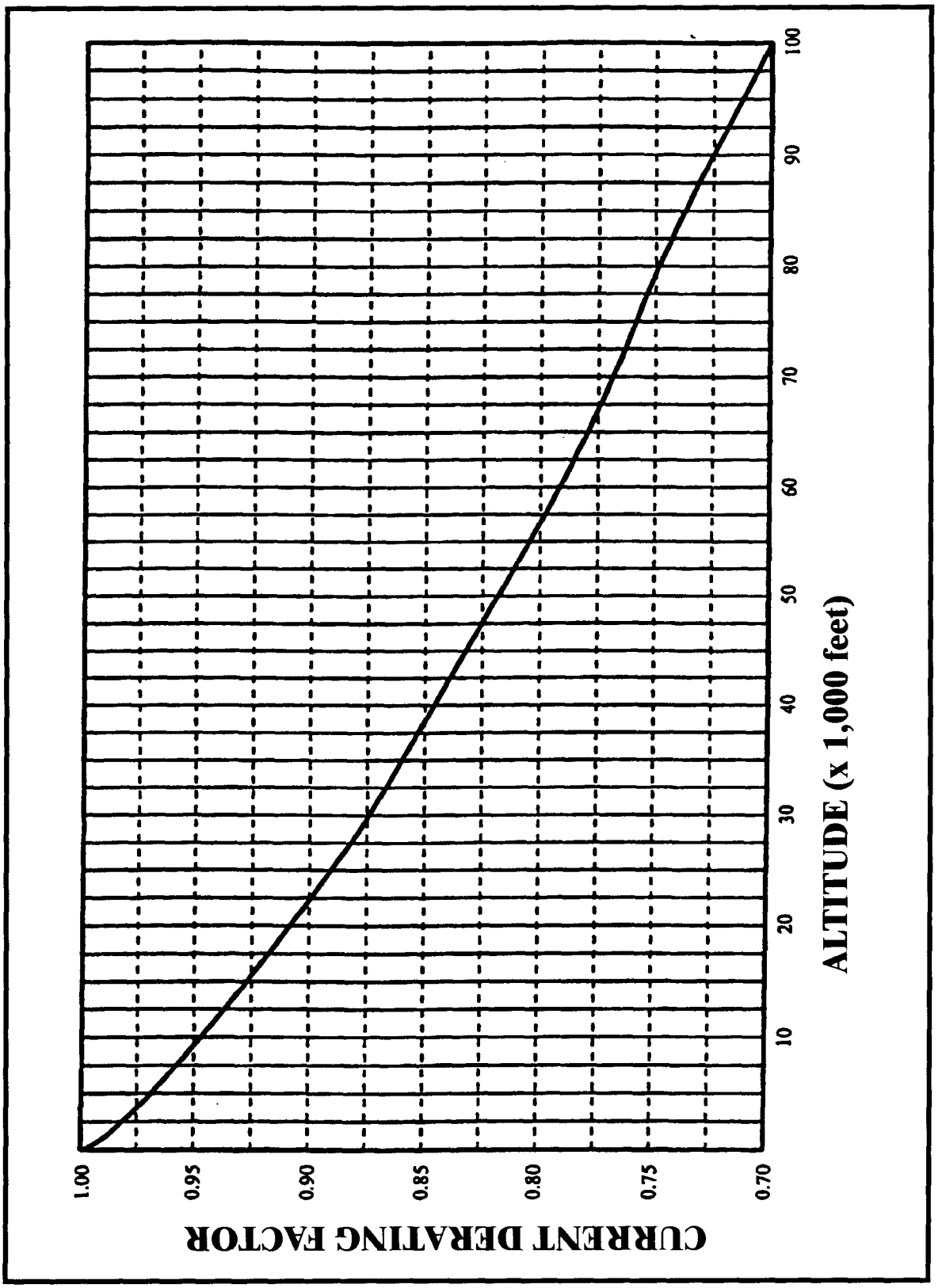

FIGURE 11-6. Altitude derating curve.

11-70. – 11-75. [RESERVED].

SECTION 6. AIRCRAFT ELECTRICAL WIRE SELECTION

11-76. GENERAL. Aircraft service imposes severe environmental condition on electrical wire. To ensure satisfactory service, inspect wire annually for abrasions, defective insulation, condition of terminations, and potential corrosion. Grounding connections for power, distribution equipment, and electromagnetic shielding must be given particular attention to ensure that electrical bonding resistance has not been significantly increased by the loosening of connections or corrosion.

a. Wire Size. Wires must have sufficient mechanical strength to allow for service conditions. Do not exceed allowable voltage drop levels. Ensure that the wires are protected by system circuit protection devices, and that they meet circuit current carrying requirements. If it is desirable to use wire sizes smaller than #20, particular attention should be given to the mechanical strength and installation handling of these wires, e.g. vibration, flexing, and termination. When used in interconnecting airframe application, #24 gauge wire must be made of high strength alloy.

b. Installation Precautions for Small Wires. As a general practice, wires smaller than size #20 must be provided with additional clamps, grouped with at least three other wires, and have additional support at terminations, such as connector grommets, strain-relief clamps, shrinkable sleeving, or telescoping bushings. They should not be used in applications where they will be subjected to excessive vibration, repeated bending, or frequent disconnection from screw terminations.

c. Identification. All wire used on aircraft must have its type identification imprinted along its length. It is common practice to follow this part number with the five digit/letter Commercial and Government Entity (C.A.G.E). code identifying the wire manufacturer. Existing installed wire that needs replacement can thereby be identified as to its performance capabilities, and the inadvertent use of a lower performance and unsuitable replacement wire avoided.

(1) In addition to the type identification imprinted by the original wire manufacturer, aircraft wire also contains its unique circuit identification coding that is put on at the time of harness assembly. The traditional "Hot Stamp" method has not been totally satisfactory in recent years when used on modern, ultra-thin-walled installations. Fracture of the insulation wall and penetration to the conductor of these materials by the stamping dies have occurred. Later in service, when these openings have been wetted by various fluids, serious arcing and surface tracking have damaged wire bundles.

(2) Extreme care must be taken during circuit identification by a hot stamp machine on wire with a 10 mil wall or thinner. Alternative identification methods, such as "Laser Printing" and "Ink Jet," are coming into increasing use by the industry. When such modern equipment is not available, the use of stamped identification sleeving should be considered on thin-walled wire, especially when insulation wall thickness falls below 10 mils.

11-77. AIRCRAFT WIRE MATERIALS. Only wire, specifically designed for airborne use, must be installed in aircraft.

a. Authentic Aircraft Wire. Most aircraft wire designs are to specifications that require manufacturers to pass rigorous testing of wires before being added to a Qualified Products List (QPL) and being permitted to produce the wire. Aircraft manufacturers who maintain their own wire specifications invariably exercise close control on their approved

sources. Such military or original equipment manufacturer (OEM) wire used on aircraft should only have originated from these defined wire mills. Aircraft wire from other unauthorized firms, and fraudulently marked with the specified identification, must be regarded as "unapproved wire," and usually will be of inferior quality with little or no process control testing. Efforts must be taken to ensure obtaining authentic, fully tested aircraft wire.

b. ***Plating.*** Bare copper develops a surface oxide coating at a rate dependent on temperature. This oxide film is a poor conductor of electricity and inhibits determination of wire. Therefore, all aircraft wiring has a coating of tin, silver, or nickel, that have far slower oxidation rates.

(1) Tin coated copper is a very common plating material. Its ability to be successfully soldered without highly active fluxes diminishes rapidly with time after manufacture. It can be used up to the limiting temperature of 150 °C.

(2) Silver-coated wire is used where temperatures do not exceed 200 °C (392 °F).

(3) Nickel coated wire retains its properties beyond 260 °C, but most aircraft wire using such coated strands have insulation systems that cannot exceed that temperature on long-term exposure. Soldered terminations of nickel-plated conductor require the use of different solder sleeves or flux than those used with tin or silver-plated conductor.

c. Conductor Stranding. Because of flight vibration and flexing, conductor round wire should be stranded to minimize fatigue breakage.

d. Wire Construction Versus Application. The most important consideration in the selection of aircraft wire is properly matching the wire's construction to the application environment. Wire construction that is suitable for the most severe environmental condition to be encountered should be selected. Wires are typically categorized as being suitable for either "open wiring" or "protected wiring" applications. MIL-W-5088L, replaced by AS50881A, wiring aerospace vehicle, Appendix A table A-I lists wires considered to have sufficient abrasion and cut-through resistance to be suitable for open-harness construction. MIL-W-5088L, replaced by *AS50881A*, wiring aerospace vehicle, Appendix A table A-II lists wires for protected applications. These wires are not recommended for aircraft interconnection wiring unless the subject harness is covered throughout its length by a protective jacket. The wire temperature rating is typically a measure of the insulation's ability to withstand the combination of ambient temperature and current related conductor temperature rise.

e. ***Insulation.*** There are many insulation materials and combinations used on aircraft electrical wire. Characteristics should be chosen based on environment; such as abrasion resistance, arc resistance, corrosion resistance, cut-through strength, dielectric strength, flame resistant, mechanical strength, smoke emission, fluid resistance, and heat distortion. An explanation of many of the abbreviations is identified in the glossary.

11-78. SUBSTITUTIONS. In the repair and modification of existing aircraft, when a replacement wire is required, the maintenance manual for that aircraft must first be reviewed to determine if the original aircraft manufacturer (OAM) has approved any substitution. If not, then the OAM must be contacted for an acceptable replacement.

a. MIL-W-5088L, replaced by *AS50881A,* wiring aerospace vehicle, Appendix A lists wire types that have been approved for military

aerospace applications in open and protected wiring applications. These wires could potentially be used for substitution when approved by the OAM.

b. Areas designated as severe wind and moisture problem (SWAMP) areas differ from aircraft to aircraft but generally are considered to be areas such as wheel wells, near wing flaps, wing folds, pylons, and other exterior areas that may have a harsh environment. Wires for these applications often have design features incorporated into their construction that may make the wire unique; therefore an acceptable substitution may be difficult, if not impossible, to find. It is very important to use the wire type recommended in the aircraft manufacturer's maintenance handbook.

c. The use of current military specification, multi-conductor cables in place of OEM installed constructions may create problems such as color sequence. Some civilian aircraft are wired with the older color sequence employing "Red-Blue-Yellow" as the first three colors. Current military specification, multi-conductor cables, in accordance with MIL-C-27500, use "White-Blue-Orange" for the initial three colors. Use of an alternative color code during modification without adequate notation on wiring diagrams could severely complicate subsequent servicing of the aircraft. At the time of this writing, MIL-C-27500 is being revised to include the older color sequence and could eliminate this problem in the future.

11-79.—11-84. [RESERVED.]

Table 11-2b. Comparable properties of wire insulation systems.

	Most desirable → Least			
Relative Ranking	1	2	3	4
Weight	PI	ETFE	COMP	PTFE
Temperature	PTFE	COMP	PI	ETFE
Abrasion resistance	PI	ETFE	COMP	PTFE
Cut-through resistance	PI	COMP	ETFE	PTFE
Chemical resistance	PTFE	ETFE	COMP	PI
Flammability	PTFE	COMP	PI	ETFE
Smoke generation	PI	COMP	PTFE	ETFE
Flexibility	PTFE	ETFE	COMP	PI
Creep (at temperature)	PI	COMP	PTFE	ETFE
Arc propagation resistance	PTFE	ETFE	COMP	PI

SECTION 7. TABLE OF ACCEPTABLE WIRES

11-85. AIRCRAFT WIRE TABLE. Tables 11-11 and 11-12 list wires used for the transmission of signal and power currents in aircraft. It does not include special purpose wires such as thermocouple, engine vibration monitor wire, fiber optics, data bus, and other such wire designs. Fire resistant wire is included because it is experiencing a wider application in aircraft circuits beyond that of the fire detection systems.

a. All wires in tables 11-11 and 11-12 have been determined to meet the flammability requirements of Title 14 of the Code of Federal Regulation (14 CFR) part 25, section 25.869(a)(4) and the applicable portion of part 1 of Appendix F of part 25.

b. The absence of any wire from tables 11-11 and 11-12 are not to be construed as being unacceptable for use in aircraft. However, the listed wires have all been reviewed for such use and have been found suitable, or have a successful history of such usage.

c. Explanations of the various insulation materials mentioned in table 11-11, by abbreviations, can be found in the glossary.

11-86. OPEN AIRFRAME INTERCONNECTING WIRE. Interconnecting wire is used in point to point open harnesses, normally in the interior or pressurized fuselage, with each wire providing enough insulation to resist damage from handling and service exposure. (See table 11-11.) Electrical wiring is often installed in aircraft without special enclosing means. This practice is known as open wiring and offers the advantages of ease of maintenance and reduced weight.

11-87. PROTECTED WIRE. Airborne wire that is used within equipment boxes, or has additional protection, such as an exterior jacket, conduit, tray, or other covering is known as protected wire. (See table 11-12.)

11-88. SEVERE WIND AND MOISTURE PROBLEMS (SWAMP). Areas such as wheel wells, wing fold and pylons, flap areas, and those areas exposed to extended weather shall dictate selection and will require special consideration. Insulation or jacketing will vary according to the environment. Suitable wire types selected from MIL-W-22759 shall be used in these applications. (See table 11-11.)

Suitable wire types selected from MIL-W-22759 are preferred for areas that require repeated bending and flexing of the wire. Consideration should be made to areas that require frequent component removal or repair. (See table 11-11.)

11-89. SHIELDED WIRE. With the increase in number of highly sensitive electronic devices found on modern aircraft, it has become very important to ensure proper shielding for many electric circuits. Shielding is the process of applying a metallic covering to wiring and equipment to eliminate interference caused by stray electromagnetic energy. Shielded wire or cable is typically connected to the aircraft's ground at both ends of the wire, or at connectors in the cable. Electromagnetic Interference (EMI) is caused when electromagnetic fields (radio waves) induce high-frequency (HF) voltages in a wire or component. The induced voltage can cause system inaccuracies or even failure, therefore putting the aircraft and passengers at risk. Shielding helps to eliminate EMI by protecting the primary conductor with an outer conductor. Refer to MIL-DTL-27500, Cable, Power, Electrical and Cable Special Purpose, Electrical Shielded and Unshielded General Specifications.

TABLE 11-11. Open Wiring.

Document	Voltage rating (maximum)	Rated wire temperature (°C)	Insulation Type	Conductor type
MIL-W-22759/1	600	200	Fluoropolymer insulated TFE and TFE coated glass	Silver coated copper
MIL-W-22759/2	600	260	Fluoropolymer insulated TFE and TFE coated glass	Nickel coated copper
MIL-W-22759/3	600	260	Fluoropolymer insulated TFE -glass-TFE	Nickel coated copper
MIL-W-22759/4	600	200	Fluoropolymer insulated TFE -glass-FEP	Silver coated copper
MIL-W-22759/5	600	200	Fluoropolymer insulated extruded TFE	Silver coated copper
MIL-W-22759/6	600	260	Fluoropolymer insulated extruded TFE	Nickel coated copper
MIL-W-22759/7	600	200	Fluoropolymer insulated extruded TFE	Silver coated copper
MIL-W-22759/8	600	260	Fluoropolymer insulated extruded TFE	Nickel coated copper
MIL-W-22759/9	1000	200	Fluoropolymer insulated extruded TFE	Silver coated copper
MIL-W-22759/10	1000	260	Fluoropolymer insulated extruded TFE	Nickel coated copper
MIL-W-22759/13	600	135	Fluoropolymer insulated FEP PVF2	Tin coated copper,
MIL-W-22759/16	600	150	Fluoropolymer insulated extruded ETFE	Tin coated copper,
MIL-W-22759/17	600	150	Fluoropolymer insulated extruded ETFE	Silver coated high strength copper alloy
MIL-W-22759/20	1000	200	Fluoropolymer insulated extruded TFE	Silver coated high strength copper alloy
MIL-W-22759/21	1000	260	Fluoropolymer insulated extruded TFE	Nickel coated high strength copper alloy
MIL-W-22759/34	600	150	Fluoropolymer insulated crosslinked modified ETFE	Tin coated copper
MIL-W-22759/35	600	200	Fluoropolymer insulated crosslinked modified ETFE	Silver coated high strength copper alloy
MIL-W-22759/41	600	200	Fluoropolymer insulated crosslinked modified ETFE	Nickel coated copper
MIL-W-22759/42	600	200	Fluoropolymer insulated crosslinked modified ETFE	Nickel coated high strength copper alloy
MIL-W-22759/43	600	200	Fluoropolymer insulated crosslinked modified ETFE	Silver coated copper
MIL-W-25038/3/2/	600	260	See specification sheet *	See specification sheet
MIL-W-81044/6	600	150	Crosslinked polyalkene	Tin coated copper
MIL-W-81044/7	600	150	Crosslinked polyalkene	Silver coated high strength copper alloy
MIL-W-81044/9	600	150	Crosslinked polyalkene	Tin coated copper
MIL-W-81044/10	600	150	Crosslinked polyalkene	Silver coated high strength copper alloy

* Inorganic Fibers - Glass - TFE

TABLE 11-12. Protected wiring.

Document	Voltage rating (maximum)	Rated wire temperature (°C)	Insulation Type	Conductor type
MIL-W-22759/11	600	200	Fluoropolymer insulated extruded TFE	Silver coated copper
MIL-W-22759/12	600	260	Fluoropolymer insulated extruded TFE	Nickel coated copper
MIL-W-22759/14	600	135	Fluoropolymer insulated FEP-PVF2	Tin coated copper
MIL-W-22759/15	600	135	Fluoropolymer insulated FEP-PVF2	Silver plated high strength copper alloy
MIL-W-22759/18	600	150	Fluoropolymer insulated extruded ETFE	Tin coated copper
MIL-W-22759/19	600	150	Fluoropolymer insulated extruded ETFE	Silver coated high strength copper alloy
MIL-W-22759/22	600	200	Fluoropolymer insulated extruded TFE	Silver coated high strength copper alloy
MIL-W-22759/23	600	260	Fluoropolymer insulated extruded TFE	Nickel coated high strength copper alloy
MIL-W-22759/32	600	150	Fluoropolymer insulated crosslinked modified ETFE	Tin coated copper
MIL-W-22759/33	600	200	Fluoropolymer insulated crosslinked modified ETFE	Silver coated high strength copper alloy
MIL-W-22759/44	600	200	Fluoropolymer insulated crosslinked modified ETFE	Silver coated copper
MIL-W-22759/45	600	200	Fluoropolymer insulated crosslinked modified ETFE	Nickel coated copper
MIL-W-22759/46	600	200	Fluoropolymer insulated crosslinked modified ETFE	Nickel coated high strength copper alloy
MIL-W-81044/12	600	150	Crosslinked polyalkene - PVF2	Tin coated copper
MIL-W-81044/13	600	150	Crosslinked polyalkene - PVF2	Silver coated high strength copper alloy
MIL-W-81381/17	600	200	Fluorocarbon polyimide	Silver coated copper
MIL-W-81381/18	600	200	Fluorocarbon polyimide	Nickel coated copper
MIL-W-81381/19	600	200	Fluorocarbon polyimide	Silver coated high strength copper alloy
MIL-W-81381/20	600	200	Fluorocarbon polyimide	Nickel coated high strength copper alloy
MIL-W-81381/21	600	150	Fluorocarbon polyimide	Tin coated copper

11-90.—11-95. [RESERVED.]

SECTION 8. WIRING INSTALLATION INSPECTION REQUIREMENTS

11-96. GENERAL. Wires and cables should be inspected for adequacy of support, protection, and general condition throughout. The desirable and undesirable features in aircraft wiring installations are listed below and indicate conditions that may or may not exist. Accordingly, aircraft wiring must be visually inspected for the following requirements:

CAUTION: For personal safety, and to avoid the possibility of fire, turn off all electrical power prior to starting an inspection of the aircraft electrical system or performing maintenance.

a. Wires and cables are supported by suitable clamps, grommets, or other devices at intervals of not more than 24 inches, except when contained in troughs, ducts, or conduits. The supporting devices should be of a suitable size and type, with the wires and cables held securely in place without damage to the insulation.

b. Metal stand-offs must be used to maintain clearance between wires and structure. Employing tape or tubing is not acceptable as an alternative to stand-offs for maintaining clearance.

c. Phenolic blocks, plastic liners, or rubber grommets are installed in holes, bulkheads, floors, or structural members where it is impossible to install off-angle clamps to maintain wiring separation. In such cases, additional protection in the form of plastic or insulating tape may be used.

d. Wires and cables in junction boxes, panels, and bundles are properly supported and laced to provide proper grouping and routing.

e. Clamp retaining screws are properly secured so that the movement of wires and cables is restricted to the span between the points of support and not on soldered or mechanical connections at terminal posts or connectors.

f. Wire and cables are properly supported and bound so that there is no interference with other wires, cables, and equipment.

g. Wires and cables are adequately supported to prevent excessive movement in areas of high vibration.

h. Insulating tubing is secured by tying, tie straps or with clamps.

i. Continuous lacing (spaced 6 inches apart) is not used, except in panels and junction boxes where this practice is optional. When lacing is installed in this manner, outside junction boxes should be removed and replaced with individual loops.

j. Do not use tapes (such as friction or plastic tape) which will dry out in service, produce chemical reactions with wire or cable insulation, or absorb moisture.

k. Insulating tubing must be kept at a minimum and must be used to protect wire and cable from abrasion, chafing, exposure to fluid, and other conditions which could affect the cable insulation. However; the use of insulating tubing for support of wires and cable in lieu of stand-offs is prohibited.

l. Do not use moisture-absorbent material as "fill" for clamps or adapters.

m. Ensure that wires and cables are not tied or fastened together in conduit or insulating tubing.

n. Ensure cable supports do not restrict the wires or cables in such a manner as to interfere with operation of equipment shock mounts.

o. Do not use tape, tie straps, or cord for primary support.

p. Make sure that drain holes are present in drip loops or in the lowest portion of tubing placed over the wiring.

q. Ensure that wires and cables are routed in such a manner that chafing will not occur against the airframe or other components.

r. Ensure that wires and cables are positioned in such a manner that they are not likely to be used as handholds or as support for personal belongings and equipment.

s. Ensure that wires and cables are routed, insofar as practicable, so that they are not exposed to damage by personnel moving within the aircraft.

t. Ensure that wires and cables are located so as not to be susceptible to damage by the storage or shifting of cargo.

u. Ensure that wires and cables are routed so that there is not a possibility of damage from battery electrolytes or other corrosive fluids.

v. Ensure that wires and cables are adequately protected in wheel wells and other areas where they may be exposed to damage from impact of rocks, ice, mud, etc. (If rerouting of wires or cables is not practical, protective jacketing may be installed). This type of installation must be held to a minimum.

w. Where practical, route electrical wires and cables above fluid lines and provide a 6 inch separation from any flammable liquid, fuel, or oxygen line, fuel tank wall, or other low voltage wiring that enters a fuel tank and requires electrical isolation to prevent an ignition hazard. Where 6 inch spacing cannot practically be provided, a minimum of 2 inches must be maintained between wiring and such lines, related equipment, fuel tank walls and low voltage wiring that enters a fuel tank. Such wiring should be closely clamped and rigidly supported and tied at intervals such that contact betwe4en such lines, related equipment, fuel tank walls or other wires, would not occur, assuming a broken wire and a missing wire tie or clamp.

x. Ensure that a trap or drip loop is provided to prevent fluids or condensed moisture from running into wires and cables dressed downward to a connector, terminal block, panel, or junction box.

y. Wires and cables installed in bilges and other locations where fluids may be trapped are routed as far from the lowest point as possible or otherwise provided with a moisture-proof covering.

z. Separate wires from high-temperature equipment, such as resistors, exhaust stacks, heating ducts, etc., to prevent insulation breakdown. Insulate wires that must run through hot areas with a high-temperature insulation material such as fiberglass or PTFE. Avoid high-temperature areas when using cables having soft plastic insulation such as polyethylene, because these materials are subject to deterioration and deformation at elevated temperatures. Many coaxial cables have this type of insulation.

aa. The minimum radius of bends in wire groups or bundles must not be less than 10 times the outside diameter of the largest wire or cable, except that at the terminal strips where wires break out at terminations or re-

verse direction in a bundle. Where the wire is suitably supported, the radius may be 3 times the diameter of the wire or cable. Where it is not practical to install wiring or cables within the radius requirements, the bend should be enclosed in insulating tubing. The radius for thermocouple wire should be done in accordance with the manufacturer's recommendation and shall be sufficient to avoid excess losses or damage to the cable.

bb. Ensure that RF cables, e.g., coaxial and triaxial are bent at a radius of no less than 6 times the outside diameter of the cable.

cc. Ensure that wires and cables, that are attached to assemblies where relative movement occurs (such as at hinges and rotating pieces; particularly doors, control sticks, control wheels, columns, and flight control surfaces), are installed or protected in such a manner as to prevent deterioration of the wires and cables caused by the relative movement of the assembled parts.

dd. Ensure that wires and electrical cables are separated from mechanical control cables. In no instance should wire be able to come closer than 1/2 inch to such controls when light hand pressure is applied to wires or controls. In cases where clearance is less than this, adequate support must be provided to prevent chafing.

ee. Ensure that wires and cables are provided with enough slack to meet the following requirements:

(1) Permit ease of maintenance.

(2) Prevent mechanical strain on the wires, cables, junctions, and supports.

(3) Permit free movement of shock and vibration mounted equipment.

(4) Allow shifting of equipment, as necessary, to perform alignment, servicing, tuning, removal of dust covers, and changing of internal components while installed in aircraft.

ff. Ensure that unused wires are individually dead-ended, tied into a bundle, and secured to a permanent structure. Each wire should have strands cut even with the insulation and a pre-insulated closed end connector or a 1-inch piece of insulating tubing placed over the wire with its end folded back and tied.

gg. Ensure that all wires and cables are identified properly at intervals of not more than 15 inches. Coaxial cables are identified at both equipment ends.

11-97. WIRING REPLACEMENT. Wiring must be replaced with equivalent wire (see paragraph 11-78) when found to have any of the following defects:

a. Wiring that has been subjected to chafing or fraying, that has been severely damaged, or that primary insulation is suspected of being penetrated.

b. Wiring on which the outer insulation is brittle to the point that slight flexing causes it to crack.

c. Wiring having weather-cracked outer insulation.

d. Wiring that is known to have been exposed to electrolyte or on which the insulation appears to be, or is suspected of being, in an initial stage of deterioration due to the effects of electrolyte.

e. Check wiring that shows evidence of overheating (even if only to a minor degree) for the cause of the overheating.

f. Wiring on which the insulation has become saturated with engine oil, hydraulic fluid, or another lubricant.

g. Wiring that bears evidence of having been crushed or severely kinked.

h. Shielded wiring on which the metallic shield is frayed and/or corroded. Cleaning agents or preservatives should not be used to minimize the effects of corrosion or deterioration of wire shields.

i. Wiring showing evidence of breaks, cracks, dirt, or moisture in the plastic sleeves placed over wire splices or terminal lugs.

j. Sections of wire in which splices occur at less than 10-foot intervals, unless specifically authorized, due to parallel connections, locations, or inaccessibility.

k. When replacing wiring or coaxial cables, identify them properly at both equipment and power source ends.

l. Wire substitution-In the repair and modification of existing aircraft, when a replacement wire is required, the maintenance manual for that aircraft should first be reviewed to determine if the original aircraft manufacturer (OAM) has approved any substitution. If not, then the OAM should be contacted for an acceptable replacement.

m. Testing of the electrical and chemical integrity of the insulation of sample wires taken from areas of the aircraft that have experienced wiring problems in the past, can be used to supplement visual examination of the wire. The test for chemical integrity should be specific for the degradation mode of the insulation. If the samples fail either the electrical or chemical integrity tests, then the wiring in the area surrounding the sampling area is a candidate for replacement.

11-98. TERMINALS AND TERMINAL BLOCKS. Inspect to ensure that the following installation requirements are met:

a. Insulating tubing is placed over terminals (except pre-insulated types) to provide electrical protection and mechanical support and is secured to prevent slippage of the tubing from the terminal.

b. Terminal module blocks are securely mounted and provided with adequate electrical clearances or insulation strips between mounting hardware and conductive parts, except when the terminal block is used for grounding purposes.

c. Terminal connections to terminal module block studs and nuts on unused studs are tight.

d. Evidence of overheating and corrosion is not present on connections to terminal module block studs.

e. Physical damage to studs, stud threads, and terminal module blocks is not evident. Replace cracked terminal strips and those studs with stripped threads.

f. The number of terminal connections to a terminal block stud does not exceed four, unless specifically authorized.

g. Shielding should be dead-ended with suitable insulated terminals.

h. All wires, terminal blocks, and individual studs are clearly identified to correspond to aircraft wiring manuals.

i. Terminations should be made using terminals of the proper size and the appropriate terminal crimping tools.

11-99. FUSES AND FUSE HOLDERS. Inspect as follows:

a. Check security of connections to fuse holders.

b. Inspect for the presence of corrosion and evidence of overheating on fuses and fuse holders. Replace corroded fuses and clean fuse holders. If evidence of overheating is found, check for correct rating of fuse.

c. Check mounting security of fuse holder.

d. Inspect for replenishment of spare fuses used in flight. Replace with fuses of appropriate current rating only.

e. Inspect for exposed fuses susceptible to shorting. Install cover of nonconducting material if required.

11-100. CONNECTORS. Ensure reliability of connectors by verifying that the following conditions are met or that repairs are effected as required.

a. Inspect connectors for security and evidence of overheating (cause of over-heating must be corrected), and exteriors for corrosion and cracks. Also, wires leading to connectors must be inspected for deterioration due to overheating. Replace corroded connections and overheated connectors.

b. Ensure installation of cable clamp (reference MIL-C-85049) adapters on applicable MS connectors, except those that are moisture-proof.

c. See that silicone tape is wrapped around wires in MS3057 cable clamp adapters so that tightening of the cable clamp adapter cap provides sufficient grip on the wires to keep tension from being applied to the connector pins.

d. Make sure unused plugs and receptacles are covered to prevent inclusion of dust and moisture. Receptacles should have metal or composite dust caps attached by their normal mating method. Plugs may have a dust cap similar to above or have a piece of polyolefin shrink sleeving shrunk over the connector, starting from the backshell threads, with a tail sufficiently long enough to double-back over the connector and be tied with polyester lacing tape behind the coupling nut. The cable identification label should be visible behind the connector or a tag should be attached identifying the associated circuit or attaching equipment. The connector should be attached to structure by its normal mounting means or by the use of appropriate clamps.

e. Ensure that connectors are fully mated by checking position and tightness of coupling ring or its alignment with fully mated indicator line on receptacle, if applicable.

f. Ensure that the coupling nut of MS connectors is safetied, by wire or other mechanical locking means, as required by applicable aircraft instructional manuals.

g. Ensure that moisture-absorbent material is not used as "fill" for MS3057 clamps or adapters.

h. Ensure that there is no evidence of deterioration such as cracking, missing, or disintegration of the potting material.

i. Identical connectors in adjacent locations can lead to incorrect connections. When such installations are unavoidable, the attached

wiring must be clearly identified and must be routed and clamped so that it cannot be mismatched.

j. Connectors in unpressurized areas should be positioned so that moisture will drain out of them when unmated. Wires exiting connectors must be routed so that moisture drains away from them.

11-101. JUNCTION BOXES, PANELS, SHIELDS, AND MICROSWITCH HOUSINGS. Examine housing assemblies to ascertain the following:

a. Verify that one or more suitable holes, about 3/8-inch diameter, but not less than 1/8-inch diameter, are provided at the lowest point of the box, except vapor-tight boxes, to allow for drainage with the aircraft on the ground or in level flight.

b. Verify that vapor tight or explosion proof boxes are externally labeled **VAPOR-TIGHT or EXPLOSION PROOF.**

c. Verify that boxes are securely mounted.

d. Verify that boxes are clean internally and free of foreign objects.

e. Verify that safety wiring is installed on all lid fasteners on J-boxes, panels, shields, or microswitch housings which are installed in areas not accessible for inspection in flight, unless the fasteners incorporate self-locking devices.

f. Verify that box wiring is properly aligned.

g. Verify that there are no unplugged, unused holes (except drainage holes) in boxes.

11-102. CONDUIT - RIGID METALLIC, FLEXIBLE METALLIC AND RIGID NONMETALLIC. Inspection of conduit assemblies should ascertain that:

a. Conduit is relieved of strain and flexing of ferrules.

b. Conduit is not collapsed or flattened from excessive bending.

c. Conduits will not trap fluids or condensed moisture. Suitable drain holes should be provided at the low points.

d. Bonding clamps do not cause damage to the conduit.

e. Weatherproof shields on flexible conduits of the nose and main landing gear and in wheel wells are not broken; that metallic braid of weatherproof conduit is not exposed; and that conduit nuts, ferrules, and conduit fittings are installed securely.

f. Ends of open conduits are flared or routed to avoid sharp edges that could chafe wires exiting from the conduit.

11-103. JUNCTIONS. Ensure that only aircraft manufacturer approved devices, such as solderless type terminals, terminal blocks, connectors, disconnect splices, permanent splices, and feed-through bushings are used for cable junctions. Inspect for the provisions outlined below:

a. Electrical junctions should be protected from short circuits resulting from movement of personnel, cargo, cases, and other loose or stored materials. Protection should be provided by covering the junction, installing them in junction boxes, or by locating them in such a manner that additional protection is not required, etc.

b. Exposed junctions and buses should be protected with insulating materials. Junctions and buses located within enclosed areas containing only electrical and electronic equipment are not considered as exposed.

c. Electrical junctions should be mechanically and electrically secure. They should not be subject to mechanical strain or used as a support for insulating materials, except for insulation on terminals.

11-104. CIRCUIT BREAKERS. Note those circuit breakers which have a tendency to open circuits frequently, require resetting more than normal, or are subject to nuisance tripping. Before considering their replacement, investigate the reason.

11-105. SYSTEM SEPARATION. Wires of redundant aircraft systems should be routed in separate bundles and through separate connectors to prevent a single fault from disabling multiple systems. Wires not protected by a circuit-protective device, such as a circuit breaker or fuse, should be routed separately from all other wiring. Power feeders from separate sources should be routed in separate bundles from each other and from other aircraft wiring, in order to prevent a single fault from disabling more than one power source. The ground wires from aircraft power sources should be attached to the airframe at separate points so that a single failure will not disable multiple sources. Wiring that is part of electro-explosive subsystems, such as cartridge-actuated fire extinguishers, rescue hoist shear, and emergency jettison devices, should be routed in shielded and jacketed twisted-pair cables, shielded without discontinuities, and kept separate from other wiring at connectors. To facilitate identification of specific separated system bundles, use of colored plastic cable ties or lacing tape is allowed. During aircraft maintenance, colored plastic cable straps or lacing tape should be replaced with the same type and color of tying materials.

11-106. ELECTROMAGNETIC INTERFERENCE (EMI). Wiring of sensitive circuits that may be affected by EMI must be routed away from other wiring interference, or provided with sufficient shielding to avoid system malfunctions under operating conditions. EMI between susceptible wiring and wiring which is a source of EMI increases in proportion to the length of parallel runs and decreases with greater separation. EMI should be limited to negligible levels in wiring related to critical systems, that is, the function of the critical system should not be affected by the EMI generated by the adjacent wire. Use of shielding with 85 percent coverage or greater is recommended. Coaxial, triaxial, twinaxial, or quadraxial cables should be used, wherever appropriate, with their shields connected to ground at a single point or multiple points, depending upon the purpose of the shielding. The airframe grounded structure may also be used as an EMI shield.

11-107. INTERFERENCE TESTS. Perform an interference test for installed equipment and electrical connections as follow:

a. The equipment must be installed in accordance with manufacturer's installation instructions. Visually inspect all the installed equipment to determine that industry standard workmanship and engineering practices were used. Verify that all mechanical and electrical connections have been properly made and that the equipment has been located and installed in accordance with the manufacturer's recommendations. The wire insulation temperature rating should also be considered.

b. Power input tests must be conducted with the equipment powered by the airplane's electrical power generating system, unless otherwise specified.

c. All associated electrically operated equipment and systems on the airplane must be on and operating before conducting interference tests, unless otherwise specified.

d. The effects on interference must be evaluated as follows:

(1) The equipment shall not be the source of harmful conducted or radiated interference or adversely affect other equipment or systems installed in the airplane.

(2) With the equipment energized on the ground, individually operate other electrically operated equipment and systems on the airplane to determine that no significant conducted or radiated interference exists. Evaluate all reasonable combinations of control settings and operating modes. Operate communication and navigation equipment on at least one low, high and mid-band frequency. Make note of systems or modes of operation that should also be evaluated during flight.

(3) For airplane equipment and systems that can be checked only in flight, determine that no operationally significant conducted or radiated interference exists. Evaluate all reasonable combinations of control settings and operating modes. Operate communications and navigation equipment on at least one low, high and mid-band frequency.

NOTE: Electromagnetic compatibility problems which develop after installation of this equipment may result from such factors as design characteristics of previously installed systems or equipment, and the physical installation itself. It is not intended that the equipment manufacturer should design for all installation environments. The installing facility will be responsible for resolving any incompatibility between this equipment and previously installed equipment in the airplane. The various factors contributing to the incompatibility should be considered.

NOTE: Ground EMI test have consistently been found adequate for follow-on approvals of like or identical equipment types, irrespective of the airplane model used for the initial approval. Radio frequency transmission devices, such as wireless telephones, must also be tested with respect to their transmission frequencies and harmonics.

11-108. IDENTIFICATION STENCILS AND PLACARDS ON ELECTRICAL EQUIPMENT. Replace worn stencils and missing placards.

11-109.—11-114. [RESERVED.]

SECTION 9. ENVIRONMENTAL PROTECTION AND INSPECTION

11-115. MAINTENANCE AND OPERATIONS. Wire bundles must be routed in accessible areas that are protected from damage from personnel, cargo, and maintenance activity. They should not be routed in areas in where they are likely to be used as handholds or as support for personal equipment or where they could become damaged during removal of aircraft equipment. Wiring must be clamped so that contact with equipment and structure is avoided. Where this cannot be accomplished, extra protection, in the form of grommets, chafe strips, etc., should be provided. Protective grommets must be used, wherever wires cannot be clamped, in a way that ensures at least a 3/8-inch clearance from structure at penetrations. Wire must not have a preload against the corners or edges of chafing strips or grommets. Wiring must be routed away from high-temperature equipment and lines to prevent deterioration of insulation. Protective flexible conduits should be made of a material and design that eliminates the potential of chafing between their internal wiring and the conduit internal walls. Wiring that must be routed across hinged panels, must be routed and clamped so that the bundle will twist, rather than bend, when the panel is moved.

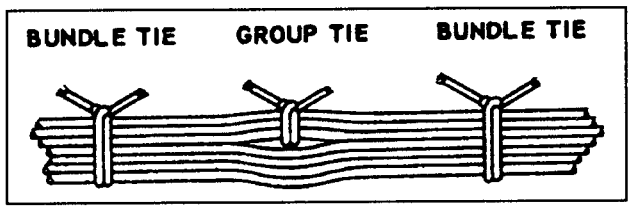

FIGURE 11-7. Group and bundle ties.

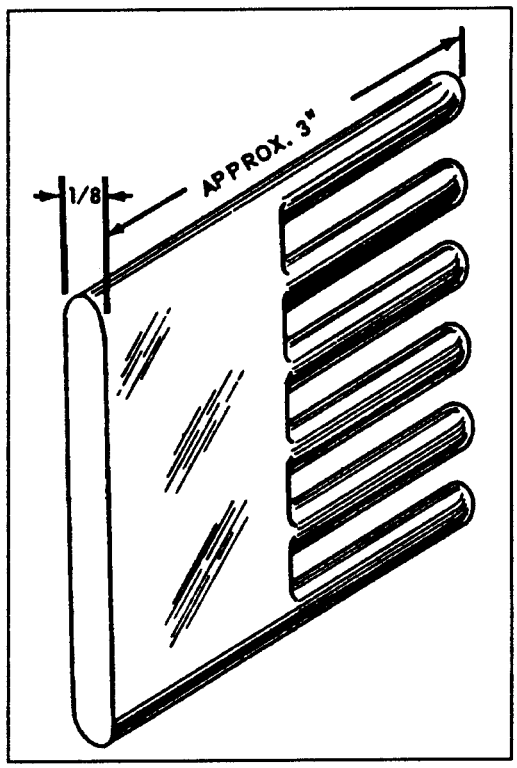

FIGURE 11-8. Comb for straightening wires in bundles.

11-116. GROUP AND BUNDLE TIES. A wire bundle consists of a quantity of wires fastened or secured together and all traveling in the same direction. Wire bundles may consist of two or more groups of wires. It is often advantageous to have a number of wire groups individually tied within the wire bundle for ease of identification at a later date. (See figure 11-7.) Comb the wire groups and bundles so that the wires will lie parallel to each other and minimize the possibility of insulation abrasion. A combing tool, similar to that shown in figure 11-8, may be made from any suitable insulating material, taking care to ensure all edges are rounded to protect the wire insulation.

11-117. MINIMUM WIRE BEND RADII. The minimum radii for bends in wire groups or bundles must not be less than 10 times the outside diameter of their largest wire. They may be bent at six times their outside diameters at breakouts or six times the diameter where they must reverse direction in a bundle, provided that they are suitably supported.

a. RF cables should not bend on a radius of less than six times the outside diameter of the cable.

b. Care should be taken to avoid sharp bends in wires that have been marked with the hot stamping process.

11-118. SLACK. Wiring should be installed with sufficient slack so that bundles and individual wires are not under tension. Wires connected to movable or shock-mounted equipment should have sufficient length to allow full travel without tension on the bundle. Wiring at terminal lugs or connectors should have sufficient slack to allow two reterminations without replacement of wires. This slack should be in addition to the drip loop and the allowance for movable equipment. Normally, wire groups or bundles should not exceed 1/2-inch deflection between support points, as shown in figure 11-9a. This measurement may be exceeded provided there is no possibility of the wire group or bundle touching a surface that may cause abrasion. Sufficient slack should be provided at each end to:

a. Permit replacement of terminals.

b. Prevent mechanical strain on wires.

c. Permit shifting of equipment for maintenance purposes.

11-118A. DRIP LOOP IN WIRE BUNDLE. A drip loop is an area where wire is dressed downward to a connector, terminal block, panel, or junction bo. In additional to the service termination and strain relief, a trap or drip loop shall be provided in the wiring to prevent fluid or condensate from running into the above devices. (see Figure 11-9b) Wires or groups of wires should enter a junction box or piece of equipment in an upward direction where practicable. Where wires must be routed downwards to a junction box or unit of electric equipment, the entry should be sealed or adequate slack should be provided to form a trap or drip loop to prevent liquid from running down the wires in the box or electric unit.

11-119. POWER FEEDERS. The power feeder wires should be routed so that they can be easily inspected or replaced. They must be given special protection to prevent potential chafing against other wiring, aircraft structure, or components.

11-120. RF CABLE. All wiring needs to be protected from damage. However, coaxial and triaxial cables are particularly vulnerable to certain types of damage. Personnel should exercise care while handling or working around coaxial. Coaxial damage can occur when clamped too tightly, or when they are bent sharply (normally at or near connectors). Damage can also be incurred during unrelated maintenance actions around the coaxial cable. Coaxial can be severely damaged on the inside without any evidence of damage on the outside. Coaxial cables with solid center conductors should not be used. Stranded center coaxial cables can be used as a direct replacement for solid center coaxial.

11-121. PRECAUTIONS.

a. Never kink coaxial cable.

b. Never drop anything on coaxial cable.

c. Never step on coaxial cable.

d. Never bend coaxial cable sharply.

e. Never loop coaxial cable tighter than the allowable bend radius.

f. Never pull on coaxial cable except in a straight line.

g. Never use coaxial cable for a handle, lean on it, or hang things on it (or any other wire).

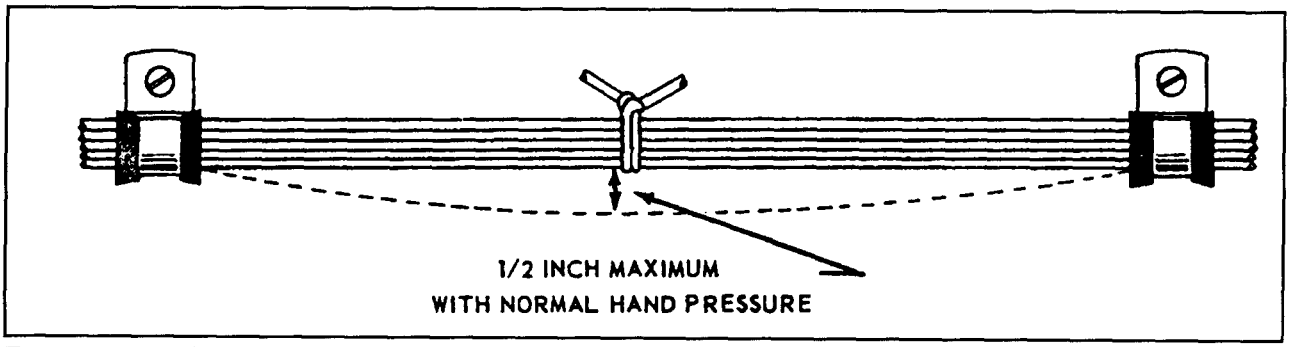

FIGURE 11-9a. Slack between supports

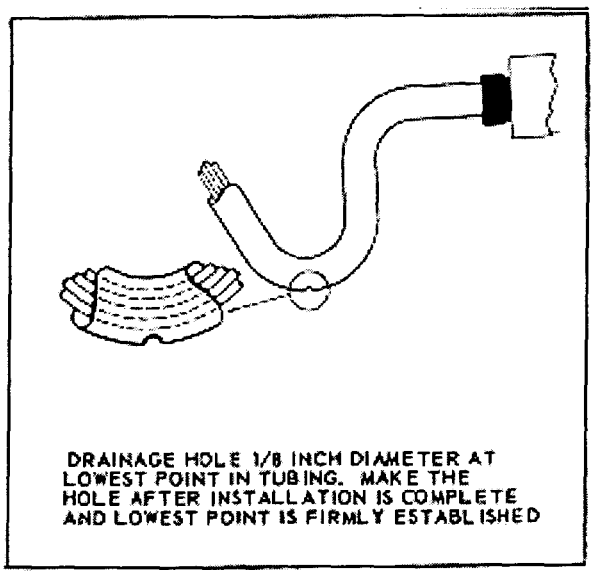

FIGURE 11-9b. Drainage hole in low point of tubing.

SECTION 11. CLAMPING

11-146. GENERAL. Wires and wire bundles must be supported by using clamps meeting Specification MS-21919, or plastic cable straps in accessible areas if correctly applied within the restrictions of paragraph 11-158. Clamps and other primary support devices must be constructed of materials that are compatible with their installation and environment, in terms of temperature, fluid resistance, exposure to ultraviolet (UV) light, and wire bundle mechanical loads. They should be spaced at intervals not exceeding 24 inches. Clamps on wire bundles should be selected so that they have a snug fit without pinching wires, as shown in figure 11-11 through figure 11-13.

CAUTION: The use of metal clamps on coaxial RF cables may cause problems if clamp fit is such that RF cable's original cross-section is distorted.

a. Clamps on wire bundles should not allow the bundle to move through the clamp when a slight axial pull is applied. Clamps on RF cables must fit without crushing and must be snug enough to prevent the cable from moving freely through the clamp, but may allow the cable to slide through the clamp when a light axial pull is applied. The cable or wire bundle may be wrapped with one or more turns of electrical tape when required to achieve this fit. Plastic clamps or cable ties must not be used where their failure could result in interference with movable controls, wire bundle contact with movable equipment, or chafing damage to essential or unprotected wiring. They must not be used on vertical runs where inadvertent slack migration could result in chafing or other damage. Clamps must be installed with their attachment hardware positioned above them, wherever practicable, so that they are unlikely to rotate as the result of wire bundle weight or wire bundle chafing. (See figure 11-11.).

b. Clamps lined with nonmetallic material should be used to support the wire bundle along the run. Tying may be used between clamps, but should not be considered as a substitute for adequate clamping. Adhesive tapes are subject to age deterioration and, therefore, are not acceptable as a clamping means.

c. The back of the clamp, whenever practical, should be rested against a structural member. Stand-offs should be used to maintain clearance between the wires and the structure. Clamps must be installed in such a manner that the electrical wires do not come in contact with other parts of the aircraft when subjected to vibration. Sufficient slack should be left between the last clamp and the electrical equipment to prevent strain at the terminal and to minimize adverse effects on shock-mounted equipment. Where wires or wire bundles pass through bulkheads or other structural members, a grommet or suitable clamp should be provided to prevent abrasion.

d. When wire bundle is clamped into position, if there is less than 3/8-inch clearance between the bulkhead cutout and the wire bundle, a suitable grommet should be installed as indicated in figure 11-14. The grommet may be cut at a 45 degree angle to facilitate installation, provided it is cemented in place and the slot is located at the top of the cutout.

11-147. WIRE AND CABLE CLAMPS INSPECTION. Inspect wire and cable clamps for proper tightness. Where cables pass through structure or bulkheads, inspect for proper clamping and grommets. Inspect for sufficient slack between the last clamp and

the electronic equipment to prevent strain at the cable terminals and to minimize adverse effects on shock-mounted equipment.

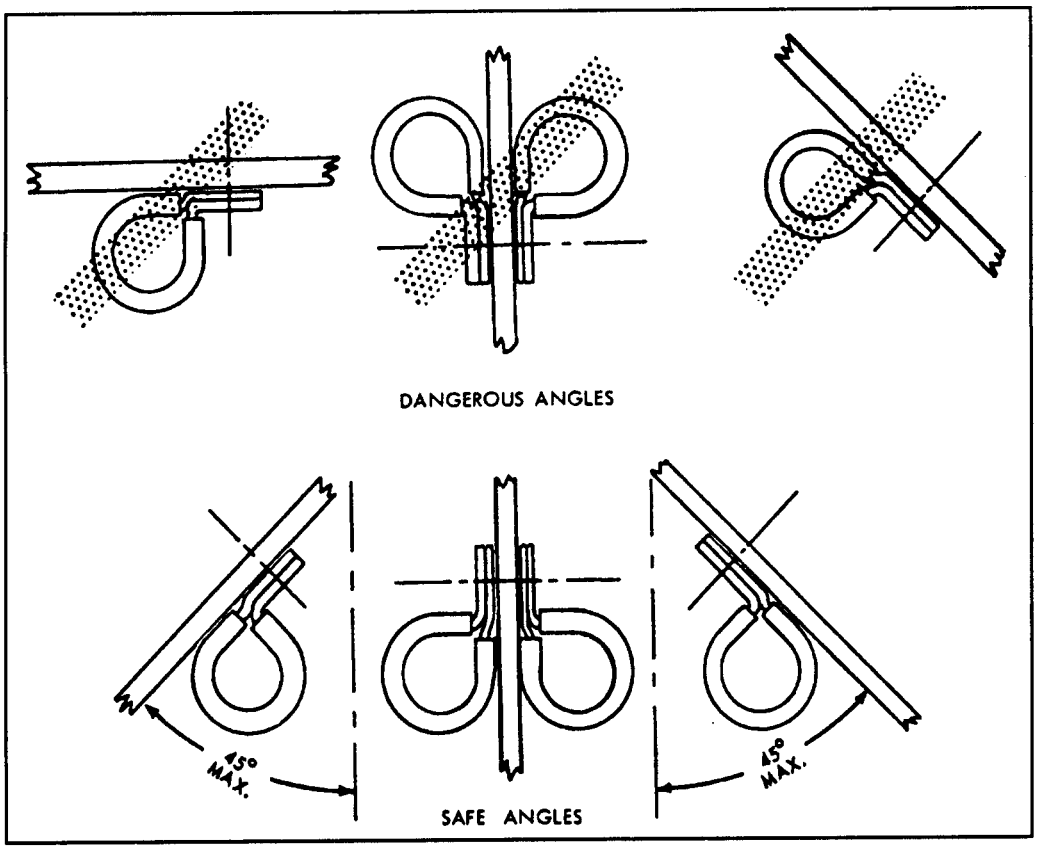

FIGURE 11-11. Safe angle for cable clamps.

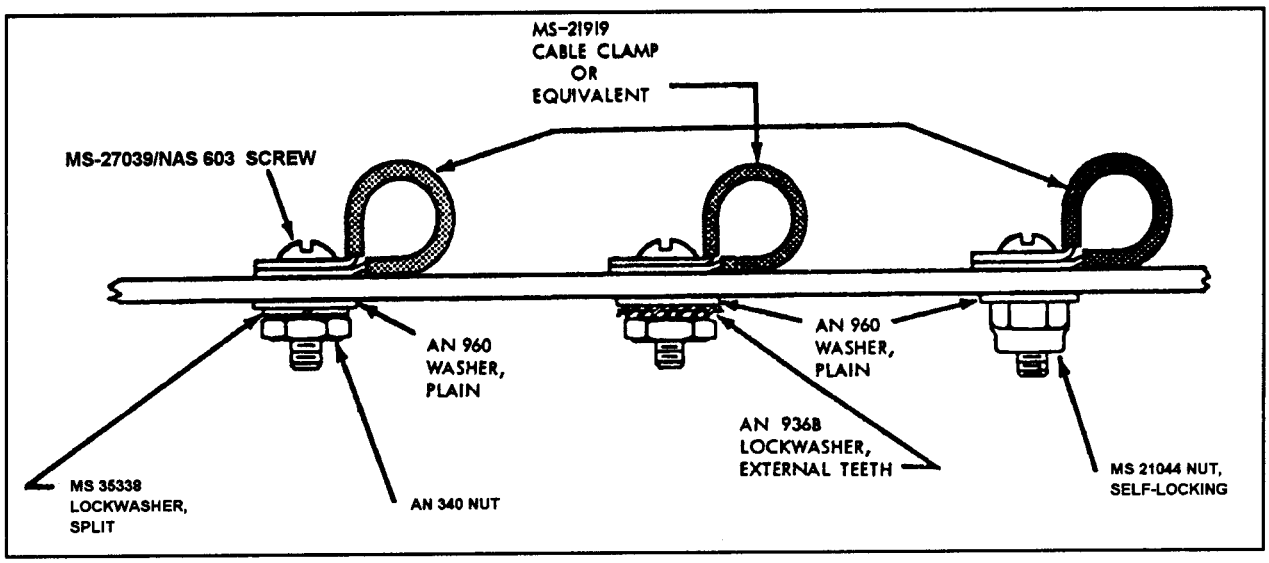

FIGURE 11-12. Typical mounting hardware for MS-21919 cable clamps.

SECTION 14. TERMINAL REPAIRS

11-174. GENERAL. Terminals are attached to the ends of electrical wires to facilitate connection of the wires to terminal strips or items of equipment. The tensile strength of the wire-to-terminal joint should be at least equivalent to the tensile strength of the wire itself, and its resistance negligible relative to the normal resistance of the wire.

a. Selection of Wire Terminals. The following should be considered in the selection of wire terminals.

(1) Current rating.

(2) Wire size (gauge) and insulation diameter.

(3) Conductor material compatibility.

(4) Stud size.

(5) Insulation material compatibility.

(6) Application environment.

(7) Solder/solderless.

Pre-insulated crimp-type ring-tongue terminals are preferred. The strength, size, and supporting means of studs and binding posts, as well as the wire size, should be considered when determining the number of terminals to be attached to any one post. In high-temperature applications, the terminal temperature rating must be greater than the ambient temperature plus current related temperature rise. Use of nickel-plated terminals and of uninsulated terminals with high-temperature insulating sleeves should be considered. Terminal blocks should be provided with adequate electrical clearance or insulation strips between mounting hardware and conductive parts.

b. Terminal Strips. Wires are usually joined at terminal strips. A terminal strip fitted with barriers should be used to prevent the terminals on adjacent studs from contacting each other. Studs should be anchored against rotation. When more than four terminals are to be connected together, a small metal bus should be mounted across two or more adjacent studs. In all cases, the current should be carried by the terminal contact surfaces and not by the stud itself. Defective studs should be replaced with studs of the same size and material since terminal strip studs of the smaller sizes may shear due to overtightening the nut. The replacement stud should be securely mounted in the terminal strip and the terminal securing nut should be tight. Terminal strips should be mounted in such a manner that loose metallic objects cannot fall across the terminals or studs. It is good practice to provide at least one spare stud for future circuit expansion or in case a stud is broken. Terminal strips that provide connection of radio and electronic systems to the aircraft electrical system should be inspected for loose connections, metallic objects that may have fallen across the terminal strip, dirt and grease accumulation, etc. These type conditions can cause arcing which may result in a fire, or system failures.

c. Terminal Lugs. Wire terminal lugs should be used to connect wiring to terminal block studs or equipment terminal studs. No more than four terminal lugs or three terminal lugs and a bus bar should be connected to any one stud. Total number of terminal lugs per stud includes a common bus bar joining adjacent studs. Four terminal lugs plus a common bus bar thus are not permitted on one stud. Terminal lugs should be selected with a stud hole diameter that matches the diameter of the stud. However, when the terminal lugs attached to a stud vary in diameter, the greatest

diameter should be placed on the bottom and the smallest diameter on top. Tightening terminal connections should not deform the terminal lugs or the studs. Terminal lugs should be so positioned that bending of the terminal lug is not required to remove the fastening screw or nut, and movement of the terminal lugs will tend to tighten the connection.

d. Copper Terminal Lugs. Solderless crimp style, copper wire, terminal lugs should be used and conform to MIL-T-7928. Spacers or washers should not be used between the tongues of terminal lugs.

e. Aluminum Terminal Lugs. The aluminum terminal lugs conforming to MIL-T-7099 (MS-25435, MS-25436, MS-25437, and MS-25438) should be crimped to aluminum wire only. The tongue of the aluminum terminal lugs or the total number of tongues of aluminum terminal lugs when stacked, should be sandwiched between two MS-25440 flat washers when terminated on terminal studs. Spacers or washers should not be used between the tongues of terminal lugs. Special attention should be given to aluminum wire and cable installations to guard against conditions that would result in excessive voltage drop and high resistance at junctions that may ultimately lead to failure of the junction. Examples of such conditions are improper installation of terminals and washers, improper torsion ("torquing" of nuts), and inadequate terminal contact areas.

f. Class 2 Terminal Lugs. The Class 2 terminal lugs conforming to MIL-T-7928 may be used for installation, provided that in such installations, Class 1 terminal lugs are adequate for replacement without rework of installation or terminal lugs. Class 2 terminal lugs should be the insulated type, unless the conductor temperature exceeds 105 °C. In that case uninsulated terminal lugs should be used. Parts' lists should indicate the appropriate Class 1 terminal lugs to be used for service replacement of any Class 2 terminal lugs installed.

g. Termination of Shielded Wire. For termination of shielded wire refer to MIL-DTL-27500.

11-175. ATTACHMENT OF TERMINALS TO STUDS. Connectors and terminals in aircraft require special attention to ensure a safe and satisfactory installation. Every possibility of short circuits, due to misinstallation, poor maintenance, and service life, should be addressed in the design. Electrical equipment malfunction has frequently been traced to poor terminal connections at terminal boards. Loose, dirty, or corroded contact surfaces can produce localized heating that may ignite nearby combustible materials or overheat adjacent wire insulation. (See paragraph 11-178)

11-176. STUDS AND INSULATORS. The following recommendations concerning studs also apply to other feed-through conductors.

a. Current Carrying Stud Resistance. Due to heat loss arising from wire-to-lug and lug-to-stud voltage drop, the resistance per unit length of a current carrying stud should not be greater than that of the wire.

b. Size of Studs. In designing the stud for a feed-through connection, attention should be given to the higher resistance of brass, as compared to copper. A suggested method of determining the size is to use a current density in the stud equivalent to that of the wire, compensating for the difference of resistance of the metals. Consideration should also be given to mechanical strength.

c. Support for Studs. The main stud support in the feed-through insulation should be independent of the attachment of the lugs to the stud. Therefore, loosening of the insula-

tion support of the stud will not affect the electric contact efficiency. In other words, the contact pressure on the wire lugs should not in any way be affected by the loosening of the stud in the insulator.

d. Support of Wire at Studs. Unless some other positive locking action is provided, the lug or wire should be supported next to the stud to prevent loosening the connection with a side pull on the wire. Torque recommendations for attaching electrical wiring devices to terminal boards or blocks, studs, posts, etc., are normally found in the manufacturer's maintenance instruction manual.

e. Feed-Through Insulator and Stud Design. Feed-through insulator design should be such as to prevent a loose insulator from failing to provide circuit isolation. It should not be able to move from between the stud and the structure, thus allowing the two to come into contact. The assembly should be so designed that it is impossible to inadvertently misassemble the parts so that faults will result. Also, it is desirable to provide means to prevent the feed-through stud from turning while tightening the connection.

11-177. WIRE TERMINALS AND BINDING POSTS. All wire terminals in or on electrical equipment, except case ground, must be firmly held together with two nuts or suitable locking provisions, or should be secured in a positive manner to equipment in such a way that no insulation material is involved in maintaining physical pressure between the various current carrying members of an electrical connection. Terminal studs or binding posts should be of a size that is entirely adequate for the current requirements of the equipment and have sufficient mechanical strength to withstand the torque required to attach the cable to the equipment. All terminals on equipment should have barriers and covers provided by equipment manufacturers.

11-178. CRIMP ON TERMINAL LUGS AND SPLICES (pre-insulated crimp type). The crimp on terminal lugs and splices must be installed using a high quality ratchet-type, crimping tool. We recommend the use of the proper calibrated tool. Aircraft quality crimp tools are manufactured to standards. Such tools are provided with positioners for the wire size and are adjusted for each wire size. It is essential that the crimp depth be appropriate for each wire size. If the crimp is too deep or not deep enough, it may break or cut individual strands, or it may not be tight enough to retain the wire in the terminal or connector. Crimps that are not tight enough are also susceptible to high resistance due to corrosion build-up between the crimped terminal and the wire. MIL-C22520/2 or MIL-T-DTl2250G specification covers in detail the general requirement for crimp tools, inspection gages and tool kits.

a. Hand, portable, and stationary power tools are available for crimping terminal lugs. These tools crimp the barrel to the conductor, and simultaneously from the insulation support to the wire insulation.

b. Crimp tools must be carefully inspected:

(1) Insure that the full cycle ratchet mechanism is tamper-proof so that it cannot be disengaged prior to or during the crimp cycle.

(2) If the tool does not function or faults are found, reject the tool and send the tool to be repaired.

(3) The tool calibration and adjustments are make only by the manufacturer or an approved calibration laboratory.

(4) Suitable gages of the Go/No Go type are available and shall be used prior to

any crimping operation and whenever possible during operation to ensure crimp dimensions.

11-179. LOCK WASHERS FOR TERMINALS ON EQUIPMENT. Where locknuts are used to ensure binding and locking of electrical terminals, they should be of the all metal type. In addition, a spring lock washer of suitable thickness may be installed under the nut to ensure good contact pressure. A plain washer should be used between the spring washer and the terminal to prevent galling. A plain nut with a spring lock washer and a plain washer may be used to provide binding and contact pressure.

11-180.—11-184. [RESERVED.]

SECTION 15. GROUNDING AND BONDING

11-185. GENERAL. One of the more important factors in the design and maintenance of aircraft electrical systems is proper bonding and grounding. Inadequate bonding or grounding can lead to unreliable operation of systems, e.g., EMI, electrostatic discharge damage to sensitive electronics, personnel shock hazard, or damage from lightning strike. This section provides an overview of the principles involved in the design and maintenance of electrical bonding and grounding. SAE ARP-1870 provides for more complete detailed information on grounding and bonding, and the application of related hardware.

11-186. GROUNDING. Grounding is the process of electrically connecting conductive objects to either a conductive structure or some other conductive return path for the purpose of safely completing either a normal or fault circuit.

a. Types of Grounding. If wires carrying return currents from different types of sources, such as signals of DC and AC generators, are connected to the same ground point or have a common connection in the return paths, an interaction of the currents will occur. Mixing return currents from various sources should be avoided because noise will be coupled from one source to another and can be a major problem for digital systems. To minimize the interaction between various return currents, different types of grounds should be identified and used. As a minimum, the design should use three ground types: (1) ac returns, (2) dc returns, and (3) all others. For distributed power systems, the power return point for an alternative power source would be separated. For example, in a two-ac generator (one on the right side and the other on the left side) system, if the right ac generator were supplying backup power to equipment located in the left side, (left equipment rack) the backup ac ground return should be labeled "ac Right". The return currents for the left generator should be connected to a ground point labeled "ac Left"

b. Current Return Paths. The design of the ground return circuit should be given as much attention as the other leads of a circuit. A requirement for proper ground connections is that they maintain an impedance that is essentially constant. Ground return circuits should have a current rating and voltage drop adequate for satisfactory operation of the connected electrical and electronic equipment. EMI problems, that can be caused by a system's power wire, can be reduced substantially by locating the associated ground return near the origin of the power wiring (e.g. circuit breaker panel) and routing the power wire and its ground return in a twisted pair. Special care should be exercised to ensure replacement on ground return leads. The use of numbered insulated wire leads instead of bare grounding jumpers may aid in this respect. In general, equipment items should have an external ground connection, even when internally grounded. Direct connections to a magnesium (which may create a fire hazard) structure must not be used for ground return.

c. Heavy-Current Grounds. Power ground connections, for generators, transformer rectifiers, batteries, external power receptacles, and other heavy-current, loads must be attached to individual grounding brackets that are attached to aircraft structure with a proper metal-to-metal bonding attachment. This attachment and the surrounding structure must provide adequate conductivity to accommodate normal and fault currents of the system without creating excessive voltage drop or damage to the structure. At least three fasteners, located in a triangular or rectangular pattern, must be used to secure such brackets

in order to minimize susceptibility to loosening under vibration. If the structure is fabricated of a material such as carbon fiber composite (CFC), which has a higher resistivity than aluminum or copper, it will be necessary to provide an alternative ground path(s) for power return current. Special attention should be considered for composite aircraft.

d. Current Return Paths for Internally Grounded Equipment. Power return or fault current ground connections within flammable vapor areas must be avoided. If they must be made, make sure these connections will not arc, spark, or overheat under all possible current flow or mechanical failure conditions, including induced lightning currents. Criteria for inspection and maintenance to ensure continued airworthiness throughout the expected life of the aircraft should be established. Power return fault currents are normally the highest currents flowing in a structure. These can be the full generator current capacity. If full generator fault current flows through a localized region of the carbon fiber structure, major heating and failure can occur. CFC and other similar low-resistive materials must not be used in power return paths. Additional voltage drops in the return path can cause voltage regulation problems. Likewise, repeated localized material heating by current surges can cause material degradation. Both problems may occur without warning and cause nonrepeatable failures or anomalies.

e. Common Ground Connections. The use of common ground connections for more than one circuit or function should be avoided except where it can be shown that related malfunctions that could affect more than one circuit will not result in a hazardous condition. Even when the loss of multiple systems does not, in itself, create a hazard, the effect of such failure can be quite distracting to the crew.

(1) Redundant systems are normally provided with the objective of assuring continued safe operation in the event of failure of a single channel and must therefore be grounded at well separated points. To avoid construction or maintenance errors that result in connecting such ground at a single point, wires that ground one channel of a redundant system should be incapable of reaching the ground attachment of the other channel.

(2) The use of loop type grounding systems (several ground leads connected in series with a ground to structure at each end) must be avoided on redundant systems, because the loss of either ground path will remain undetected, leaving both systems, with a potential single-point failure.

(3) Electrical power sources must be grounded at separate locations on the aircraft structure. The loss of multiple sources of electrical power, as the result of corrosion of a ground connection or failure of the related fasteners, may result in the loss of multiple systems and should be avoided by making the ground attachments at separate locations.

(4) Bonds to thermally or vibration-isolated structure require special consideration to avoid single ground return to primary structure.

(5) The effect of the interconnection of the circuits when ungrounded should be considered whenever a common ground connection is used. This is particularly important when employing terminal junction grounding modules or other types of gang grounds that have a single attachment point.

SECTION 16. WIRE MARKING

11-205. GENERAL. The proper identification of electrical wires and cables with their circuits and voltages is necessary to provide safety of operation, safety to maintenance personnel, and ease of maintenance.

a. Each wire and cable should be marked with a part number. It is common practice for wire manufacturers to follow the wire material part number with the five digit/letter C.A.G.E. code identifying the wire manufacturer. Existing installed wire that needs replacement can thereby be identified as to its performance capabilities, and the inadvertent use of a lower performance and unsuitable replacement wire avoided.

b. The method of identification should not impair the characteristics of the wiring.

CAUTION: Do not use metallic bands in place of insulating sleeves. Exercise care when marking coaxial or data bus cable, as deforming the cable may change its electrical characteristics.

11-206. WIRE IDENTIFICATION. To facilitate installation and maintenance, original wire-marking identification is to be retained. The wire identification marks should consist of a combination of letters and numbers that identify the wire, the circuit it belongs to, its gauge size, and any other information to relate the wire to a wiring diagram. All markings should be legible in size, type, and color.

11-207. IDENTIFICATION AND INFORMATION RELATED TO THE WIRE AND WIRING DIAGRAMS. The wire identification marking should consist of similar information to relate the wire to a wiring diagram.

11-208. PLACEMENT OF IDENTIFICATION MARKINGS. Identification markings should be placed at each end of the wire and at 15-inch maximum intervals along the length of the wire. Wires less than 3 inches long need not be identified. Wires 3 to 7 inches in length should be identified approximately at the center. Added identification marker sleeves should be so located that ties, clamps, or supporting devices need not be removed in order to read the identification.

The wire identification code must be printed to read horizontally (from left to right) or vertically (from top to bottom). The two methods of marking wire or cable are as follows:

a. Direct marking is accomplished by printing the cable's outer covering. (See figure 11-23.)

b. Indirect marking is accomplished by printing a heat-shrinkable sleeve and installing the printed sleeve on the wire or cables outer covering. Indirect-marked wire or cable should be identified with printed sleeves at each end and at intervals not longer than 6 feet. The individual wires inside a cable should be identified within 3 inches of their termination. (See figure 11-24.)

11-209. TYPES OF WIRE MARKINGS. The preferred method is to mark directly on the wire. A successful requirement qualification should produce markings that meet the marking characteristics specified in MIL-W-5088 or AS50881A without causing insulation degradation. Teflon coated wires, shielded wiring, multi-conductor cable, and thermocouple wires usually require special sleeves to carry identification marks. There are some wire marking machines in the market that can be used to stamp directly on the type wires mentioned above. Whatever method of mark-

ing is used, the marking should be legible and the color should contrast with the wire insulation or sleeve.

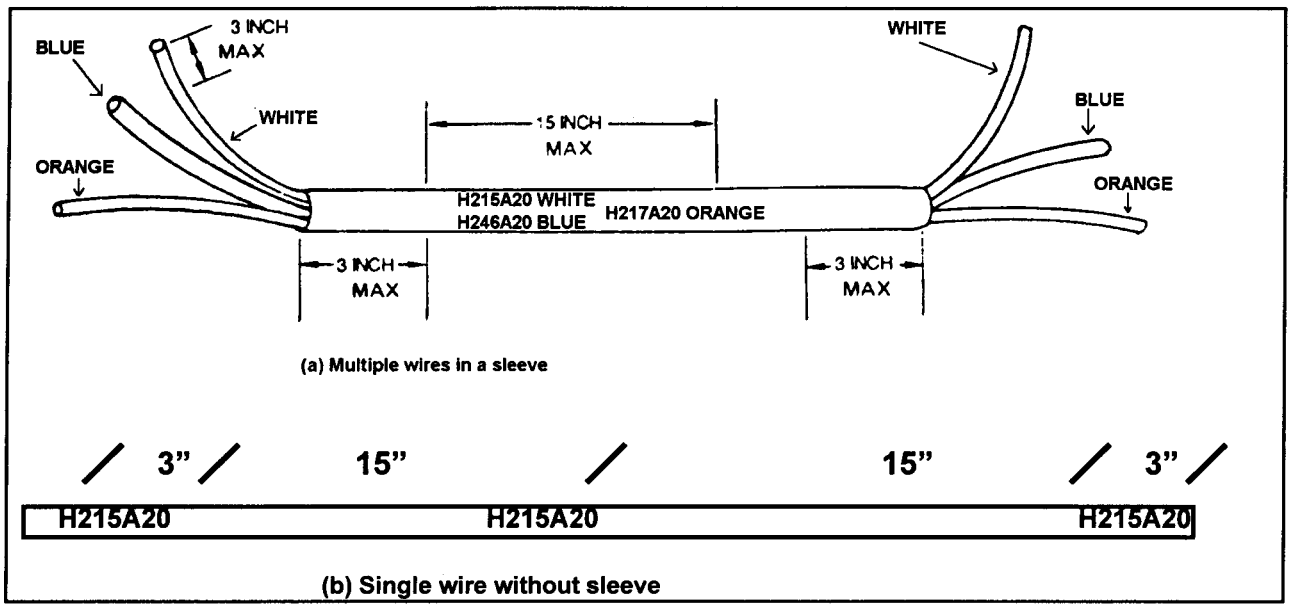

FIGURE 11-23. Spacing of printed identification marks (direct marking).

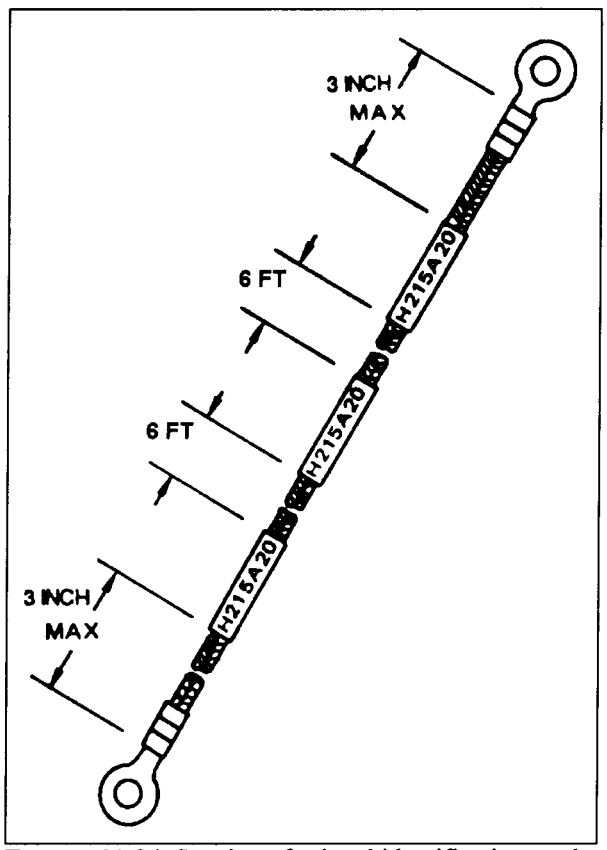

FIGURE 11-24. Spacing of printed identification marks (indirect marking).

a. Extreme care must, therefore, be taken during circuit identification by a hot stamp machine on insulation wall 10 mils or thinner.

b. Alternative identification methods such as "Laser Printing", "Ink Jet", and "Dot Matrix" are preferred. When such modern equipment is not available, the use of stamped identification sleeving should be considered on insulation wall thickness of 10 mils or less.

11-210. HOT STAMP MARKING. Due to widespread use of hot stamp wire marking, personnel should refer to SAE ARP5369, Guidelines for Wire Identification Marking using the Hot Stamp Process, for guidance on minimizing insulation damage. Hot stamp process uses a heated typeface to transfer pigment from a ribbon or foil to the surface of wires or cables. The traditional method imprints hot ink marks onto the wire. Exercise caution when using this method, as it has been shown to damage insulation when incorrectly applied. Typeset characters, similar to that used in printing presses but shaped to the

contour of the wire, are heated to the desired temperature. Wire is pulled through a channel directly underneath the characters. The heat of the type set characters transfers the ink from the marking foil onto the wire.

a. Good marking is obtained only by the proper combination of temperature, pressure, and dwelling. Hot stamp will mark wire with an outside diameter of 0.038 to 0.25-inch.

b. Before producing hot stamp wire, it must be assured that the marking machine is properly adjusted to provide the best wire marking with the least wire insulation deterioration. The marking should never create an indent greater than 10 percent of the insulation wall.

CAUTION: The traditional Hot Stamp method is not recommended for use on wire with outside diameters of less than 0.035. (REF. SAE ARP5369). Stamping dies may cause fracture of the insulation wall and penetration to the conductor of these materials. When various fluids wet these opening in service, arcing and surface tracking damage wire bundles. Later in service, when various fluids have wet these openings, serious arcing and surface tracking will have damaged wire bundles.

11-211. DOT MATRIX MARKING. The dot matrix marking is imprinted onto the wire or cable very similar to that of a dot matrix computer printer. The wire must go through a cleaning process to make sure it is clean and dry for the ink to adhere. Wires marked with dot matrix equipment require a cure consisting of an UV curing process, which is normally applied by the marking equipment. This cure should normally be complete 16 to 24 hours after marking. Dot matrix makes a legible mark without damaging the insulation. Depending on equipment configuration, dot matrix can mark wire from 0.037 to 0.5-inch outside diameter. Multi-conductor cable can also be marked.

11-212. INK JET MARKING. This is a "non-impact" marking method wherein ink droplets are electrically charged and then directed onto the moving wire to form the characters. Two basic ink types are available: thermal cure and UV cure.

a. Thermal cure inks must generally be heated in an oven for a length of time after marking to obtain their durability. UV cure inks are cured in line much like dot matrix.

b. Ink jet marks the wire on the fly and makes a reasonably durable and legible mark without damaging the insulation. Ink jets normally mark wire from 0.030 to 0.25-inch outside diameter. Multiconductor cable can also be marked.

11-213. LASER MARKING. Of the variety of laser marking machines, UV lasers are proving to be the best. This method marks into the surface of the wire's insulation without degradation to its performance. One common type of UV laser is referred to as an excimer laser marker. UV laser produces the most durable marks because it marks into the insulation instead of on the surface. However, excimer laser will only mark insulation that contain appropriate percentages of titanium dioxide (TiO_2). The wire can be marked on the fly. UV can mark from 0.030 to 0.25-inch outside diameter. The UV laser makes only gray marks and they appear more legible on white or pastel-colored insulation.

11-214. IDENTIFICATION SLEEVES. Flexible sleeving, either clear or opaque, is satisfactory for general use. When color-coded or striped component wire is used as part of a cable, the identification sleeve should

specify which color is associated with each wire identification code. Identification sleeves are normally used for identifying the following types of wire or cable:

a. Unjacketed shielded wire.

b. Thermocouple wire identification is normally accomplished by means of identification sleeves. As the thermocouple wire is usually of the duplex type (two insulated wires within the same casing), each wire at the termination point bears the full name of the conductor. Thermocouple conductors are alumel, chromel, iron, constantan, and copper constantan.

c. Coaxial cable should not be hot stamped directly. When marking coaxial cable, care should be taken not to deform the cable as this may change the electrical characteristics of the cable. When cables cannot be printed directly, they should be identified by printing the identification code (and individual wire color, where applicable) on a nonmetallic material placed externally to the outer covering at the terminating end and at each junction or pressure bulkhead. Cables not enclosed in conduit or a common jacket should be identified with printed sleeves at each end and at intervals not longer than 3 feet. Individual wires within a cable should be identified within 3 inches from their termination.

d. Multiconductor cable normally use identification sleeves for identifying unshielded, unjacketed cable.

e. High-temperature wire with insulation is difficult to mark (such as Teflon and fiberglass).

11-215. IDENTIFICATION TAPE. Identification tape can be used in place of sleeving, in most cases (i.e. polyvinylfluoride).

11-216. OPERATING CONDITIONS. For sleeving exposed to high temperatures (over 400 °F), materials such as silicone fiberglass should be used.

11-217. INSTALLATION OF PRINTED SLEEVES. Polyolefin sleeving should be used in areas where resistance to solvent and synthetic hydraulic fluids is necessary. Sleeves may be secured in place with cable ties or by heat shrinking. The identification sleeving for various sizes of wire is shown in table 11-17.

Table 11-17. Recommended size of identification sleeving.

Wire Size		Sleeving Size	
AN	AL	No.	Nominal ID (inches)
#24		12	.085
#22		11	.095
#20		10	.106
#18		9	.118
#16		8	.113
#14		7	.148
#12		6	.166
#10		4	.208
#8	#8	2	.263
#6	#6	0	.330
#4	#4	3/8 inch	.375
#2	#2	1/2 inch	.500
#1	#1	1/2 inch	.500
#0	#0	5/8 inch	.625
#00	#00	5/8 inch	.625
#000	#000	3/4 inch	.750
#0000	#0000	3/4 inch	.750

11-218. IDENTIFICATION OF WIRE BUNDLES AND HARNESSES. The identification of wire bundles and harnesses is becoming a common practice and may be accomplished by the use of a marked sleeve tied in place or by the use of pressure-sensitive tape as indicated in figure 11-25.

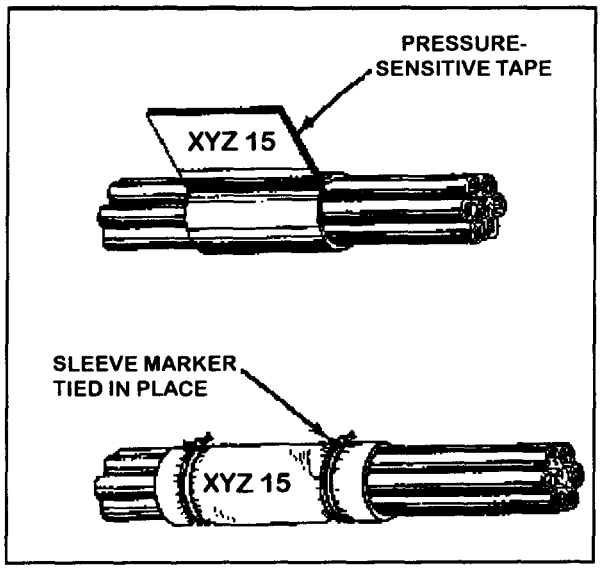

FIGURE 11-25. Identification of wire bundles and harnesses.

a. Wires for which identifications are reassigned after installation, may be remarked on sleeves at the termination of each wire segment. It may be necessary to reidentify such wires throughout their lengths to facilitate ease of maintenance.

b. For high-density harnessed, shielded, and jacketed multiconductor cables and when using nonsignificant wire identification, color coding or its alphanumeric equivalent may be interchanged within the same harnesses. The alphanumeric equivalent of the color code should be as set forth in MIL-STD-681.

11-219. TERMINAL MARKING SLEEVE AND TAGS. Typical cable markers are flat, nonheat-shrinkable tags. Heat-shrinkable marking sleeves are available for marking wires and cables, and should be inserted over the proper wire or cable and heat-shrunk using the proper manufacturer recommended heating tool. (See figures 11-26 and 11-27.)

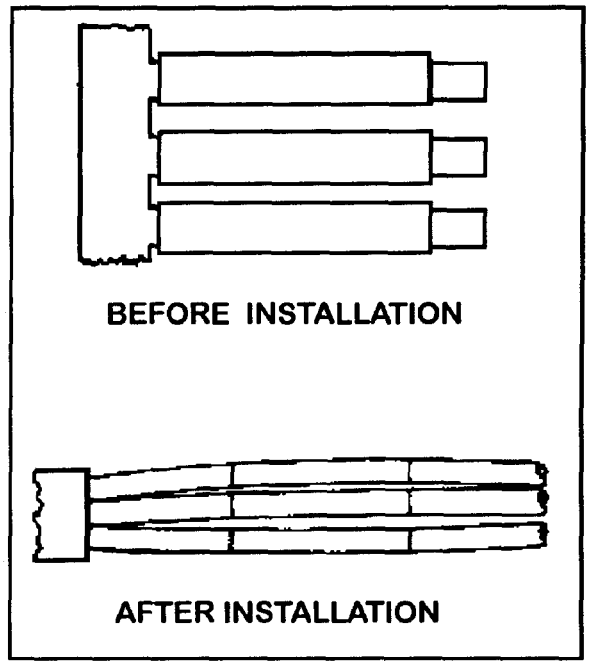

FIGURE 11-26. Standard sleeves (135 °C).

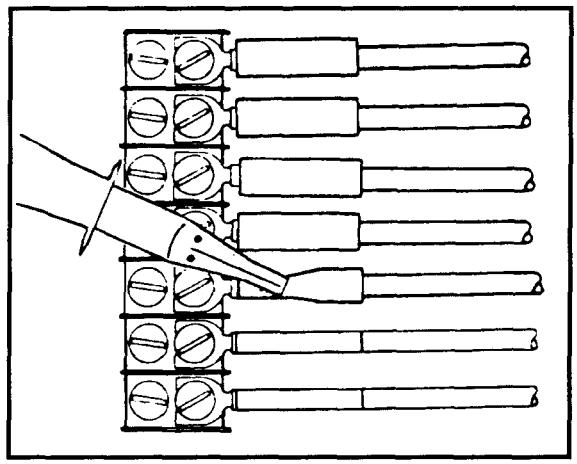

FIGURE 11-27. Installation of heat-shrinkable insulation sleeves.

11-220. SLEEVES AND CABLE MARKERS SELECTION. Sleeves and cable markers must be selected by cable size and operating conditions. (See tables 11-18 through 11-21).

a. Markers are printed using a typewriter with a modified roller. Blank markers on a bandolier are fed into the typewriter, where they are marked in any desired combination of characters. The typed markers, still on ban-

doliers, are heated in an infrared heating tool that processes the markers for permanency. The typed and heat-treated markers remain on the bandolier until ready for installation.

b. Markers are normally installed using the following procedure:

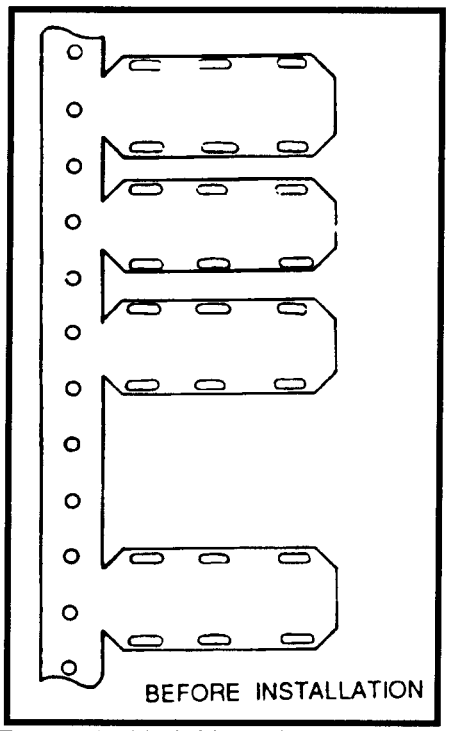

FIGURE 11-28. Cable markers.

(1) Select the smallest tie-down strap that will accommodate the outside diameter of the cable. (See table 11-22.)

(2) Cut the marking plate from the bandolier. (See figure 11-28.)

(3) Thread the tie-down straps through holes in marking plate and around cable. Thread tip of tie-down strap through slot in head. (See figure 11-29.) Pull tip until strap is snug around cable.

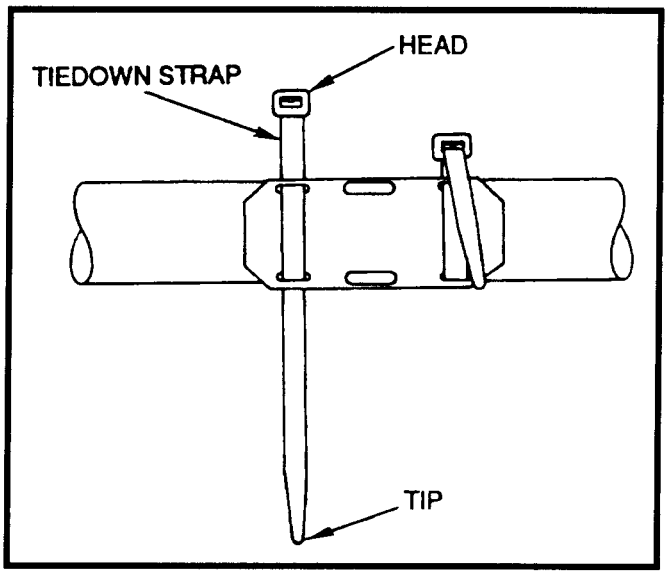

FIGURE 11-29. Tie-down strap installation.

TABLE 11-18. Selection table for standard sleeves.

Wire or Cable Diameter Range. (inches) Min	Max	Markable Length * (inches)	Installed Sleeve Length (nom) (inches)	Installed Wall Thickness (max inches)	As-supplied Inside Diameter (min inches)
0.050	0.080	18	1.5	0.026	0.093
0.075	0.110	18	1.5	0.026	0.125
0.100	0.150	18	1.5	0.028	0.187
0.135	0.215	18	1.5	0.028	0.250
0.200	0.300	18	1.5	0.028	0.375
0.135	0.300	18	1.5	0.028	0.375
0.260	0.450	18	1.5	0.028	0.475

* Based on 12 characters per inch

TABLE 11-19. Selection table for thin-wall sleeves.

Wire or Cable Diameter Range (inches) Min.	Max.	Markable Length * (inches)	Installed Sleeve Length (nom) (inches)	Installed Wall Thickness (max inches)	As-supplied Inside Diameter (min inches)
0.035	0.080	22	1.75	0.020	0.093
0.075	0.110	22	1.75	0.020	0.125
0.100	0.150	21	1.75	0.021	0.187
0.135	0.225	21	1.75	0.021	0.250
* Based on 12 characters per inch					

TABLE 11-20. Selection table for high-temperature sleeves.

Wire or Cable Diameter Range (inches) Min.	Max.	Markable Length * (inches)	Installed Sleeve Length (nom) (inches)	Installed Wall Thickness (max inches)	As-supplied Inside Diameter (min inches)
0.035	0.080	18	1.5	0.019	0.093
0.075	0.110	18	1.5	0.016	0.125
0.100	0.150	18	1.5	0.018	0.187
0.135	0.215	18	1.5	0.018	0.250
0.200	0.300	18	1.5	0.018	0.375
0.260	0.450	18	1.5	0.018	0.475
* Based on 12 characters per inch					

TABLE 11-21. Selection table for cable markers.

Cable Diameter Range (inches)	Type of Cable Marker	Number of Attachment Holes	Number of Lines of Type	Marker Thickness (nom) (inches)
0.25-0.50	Standard, 135 °C	4	2	0.025
0.25-0.50	High Temperature, 200 °C	4	2	0.020
0.25-0.50	Nuclear, 135 °C	4	2	0.025
0.50-up	Standard, 135 °C	4	3	0.025
0.50-up	Standard, 135 °C	6	3	0.025
0.50-up	High Temperature, 200 °C	4	3	0.020
0.50-up	High Temperature, 200 °C	6	3	0.020
0.50-up	Nuclear, 135 °C	4	3	0.025
0.50-up	Nuclear, 135 °C	6	3	0.025

TABLE 11-22. Plastic tie-down straps (MS3367, Type I, Class 1).

Cable Diameter (inches) Min	Max	Tie-down Strap MS3367-	Strap Identification *	Installation Tool	Tension Setting
1/16	5/8	4-9	Miniature (MIN)	MS90387-1	2
1/16	1¼	5-9	Intermediate (INT)	MS90387-1	4
1/16	4	2-9	Standard (STD)	MS90387-1	6
3/16	8	6-9	Heavy (HVY)	MS90387-2	6
* The specified tool tension settings are for typical cable application. Settings less than or greater than those specified may be required for special applications.					

(4) Select the applicable installation tool and move the tension setting to the correct position. (See figure 11-30.)

(5) Slide tip of strap into opening in the installation tool nose piece. (See figure 11-30.)

(6) Keeping tool against head of tie-down strap, ensure gripper engages tie-down strap, and squeeze trigger of installation tool until strap installation is completed as shown in figure 11-31.

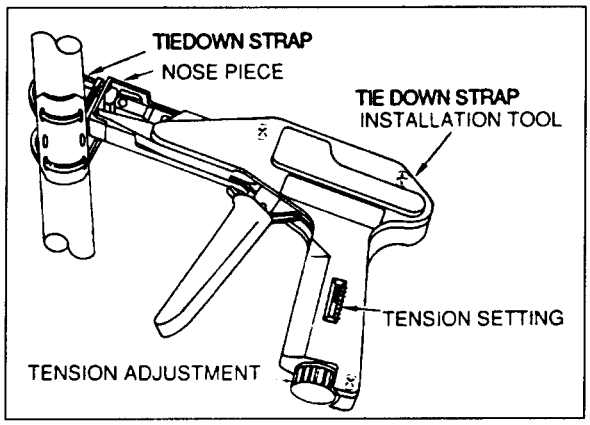

FIGURE 11-30. Tie-down strap installation tool.

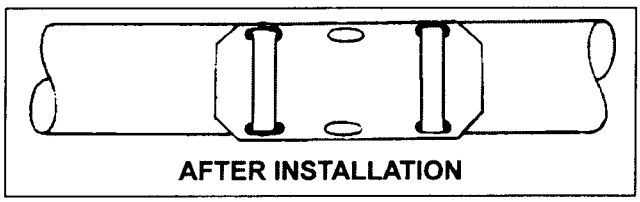

FIGURE 11-31. Completed installation.

11-221. TEMPORARY WIRE AND CABLE MARKING PROCEDURE. A temporary wire marking procedure follows but should be used only with caution and with plans for future permanence. (See figure 11-32.)

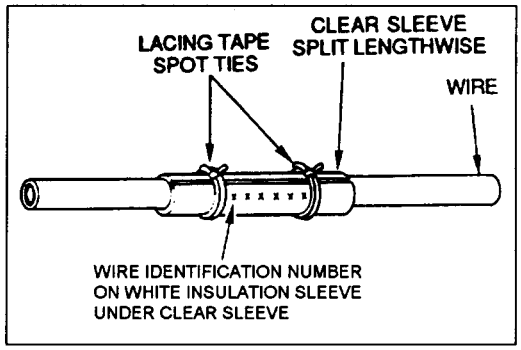

FIGURE 11-32. Temporary wire identification marker.

a. With a pen or a typewriter, write wire number on good quality white split insulation sleeve.

b. Trim excess white insulation sleeve, leaving just enough for one wrap around wire to be marked, with number fully visible.

c. Position marked white insulation sleeve on wire so that shielding, ties, clamps, or supporting devices need not be removed to read the number.

d. Obtain clear plastic sleeve that is long enough to extend 1/4 inch past white insulation sleeve marker edges and wide enough to overlap itself when wrapped around white insulation and wire.

e. Slit clear sleeve lengthwise and place around marker and wire.

f. Secure each end of clear sleeve with lacing tape spot tie to prevent loosening of sleeve.

11-222. MARKER SLEEVE INSTLATION AFTER PRINTING. The following general procedures apply:

a. Hold marker, printed side up, and press end of wire on lip of sleeve to open sleeve. (See figure 11-33.)

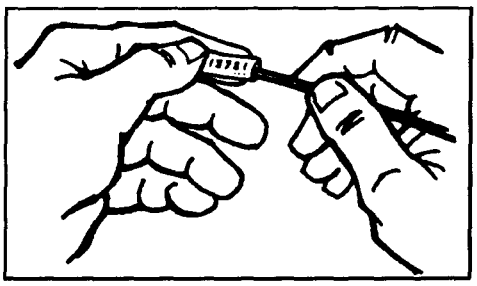

FIGURE 11-33. Inserting wire into marker.

b. If wire has been stripped, use a scrap piece of unstripped wire to open the end of the marker.

c. Push sleeve onto wire with a gentle twisting motion.

d. Shrink marker sleeve, using heat gun with shrink tubing attachment. (See figure 11-34.)

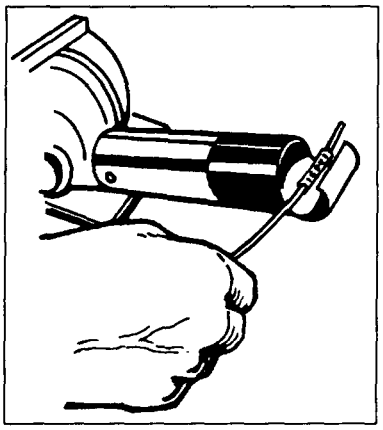

FIGURE 11-34. Shrinking marker on wire.

11-223.—11-229. [RESERVED.]

SECTION 17. CONNECTORS

11-230. GENERAL. There is a multitude of types of connectors. Crimped contacts are generally used. Some of the more common are the round cannon type, the rectangular, and the module blocks. Environmental-resistant connectors should be used in applications subject to fluids, vibration, thermal, mechanical shock, and/or corrosive elements. When HIRF/Lightning protection is required, special attention should be given to the terminations of individual or overall shields. The number and complexity of wiring systems have resulted in an increased use of electrical connectors. The proper choice and application of connectors is a significant part of the aircraft wiring system. Connectors must be kept to a minimum, selected, and installed to provide the maximum degree of safety and reliability to the aircraft. For the installation of any particular connector assembly, the specification of the manufacturer or the appropriate governing agency must be followed.

11-231. SELECTION. . Connectors should be selected to provide the maximum degree of safety and reliability considering electrical and environmental requirements. Consider the size, weight, tooling, logistic, maintenance support, and compatibility with standardization programs. For ease of assembly and maintenance, connectors using crimped contacts are generally chosen for all applications except those requiring an hermetic seal. (Reference SAE ARP 1308, Preferred Electrical Connectors For Aerospace Vehicles and Associated Equipment.) A replacement connector of the same basic type and design as the connector it replaces should be used. With a crimp type connector for any electrical connection, the proper insertion, or extraction tool must be used to install or remove wires from such a connector. Refer to manufacturer or aircraft instruction manual. After the connector is disconnected, inspect it for loose soldered connections to prevent unintentional grounding. Connectors that are susceptible to corrosion difficulties may be treated with a chemically inert waterproof jelly.

11-232. TYPES OF CONNECTORS. Connectors must be identified by an original identification number derived from MIL Specification (MS) or OAM specification. Figure 11-35 provides some examples of MS connector types. Several different types are shown in figures 11-36 and 11-37.

a. Environmental Classes. Environment-resistant connectors are used in applications where they will probably be subjected to fluids, vibration, thermal, mechanical shock, corrosive elements, etc. Firewall class connectors incorporating these same features should, in addition, be able to prevent the penetration of the fire through the aircraft firewall connector opening and continue to function without failure for a specified period of time when exposed to fire. Hermetic connectors provide a pressure seal for maintaining pressurized areas. When EMI/RFI protection is required, special attention should be given to the termination of individual and overall shields. Backshell adapters designed for shield termination, connectors with conductive finishes, and EMI grounding fingers are available for this purpose.

b. Rectangular Connectors. The rectangular connectors are typically used in applications where a very large number of circuits are accommodated in a single mated pair. They are available with a great variety of contacts, which can include a mix of standard, coaxial, and large power types. Coupling is accomplished by various means. Smaller types are secured with screws which hold their flanges together. Larger ones have integral guide pins that ensure correct alignment, or jackscrews

pins that ensure correct alignment, or jack-screws that both align and lock the connectors. Rack and panel connectors use integral or rack-mounted pins for alignment and box mounting hardware for couplings.

c. Module Blocks. These junctions accept crimped contacts similar to those on connectors. Some use internal busing to provide a variety of circuit arrangements. They are useful where a number of wires are connected for power or signal distribution.

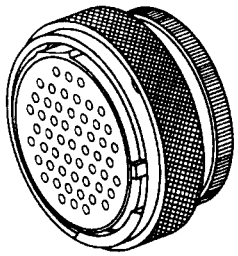

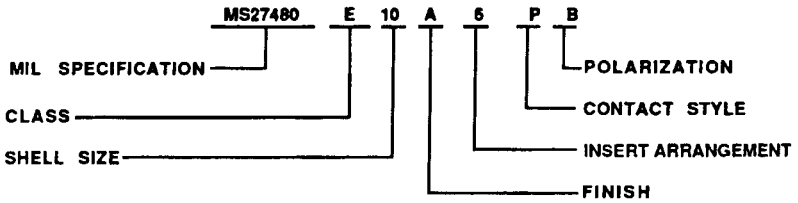

MS27472 WALL MOUNT RECEPTACLE
MS27473 STRAIGHT PLUG
MS27474 JAM NUT RECEPTACLE
MS27475 HERMITIC WALL MOUNT RECEPTACLE
MS27476 HERMETIC BOX MOUNT RECEPTACLE
MS27477 HERMETIC JAM NUT RECEPTACLE
MS27478 HERMETIC SOLDER MOUNT RECEPTACLE
MS27479 WALL MOUNT RECEPTACLE (NOTE 1)
MS27480 STRAIGHT PLUG (NOTE 1)
MS27481 JAM NUT RECEPTACLE (NOTE 1)
MS27482 HERMETIC WALL MOUNT RECEPTACLE (NOTE 1)
MS27483 HERMETIC JAM NUT RECEPTACLE (NOTE 1)
MS27484 STRAIGHT PLUG, EMI GROUNDING
MS27497 WALL RECEPTACLE, BACK PANEL MOUNTING
MS27499 BOX MOUNTING RECEPTACLE
MS27500 90° PLUG (NOTE 1)
MS27503 HERMETIC SOLDER MOUNT RECEPTACLE (NOTE 1)
MS27504 BOX MOUNT RECEPTACLE (NOTE 1)
MS27508 BOX MOUNT RECEPTACLE, BACK PANEL MOUNTING
MS27513 BOX MOUNT RECEPTACLE, LONG GROMMET
MS27664 WALL MOUNT RECEPTACLE, BACK PANEL MOUNTING (NOTE 1)
MS27667 THRU-BULKHEAD RECEPTACLE

NOTE

1. ACTIVE	SUPERSEDES
MS27472	MS27479
MS27473	MS27480
MS27474	MS27481
MS27475	MS27482
MS27477	MS27483
MS27473 WITH MS27507 ELBOW	MS27500
MS27478	MS27503
MS27499	MS27504
MS27497	MS27664

CLASS

E ENVIRONMENT RESISTING-BOX AND THRU-BULKHEAD MOUNTING TYPES ONLY (SEE CLASS T)
P POTTING-INCLUDES POTTING FORM AND SHORT REAR GROMMET
T ENVIRONMENT RESISTING-WALL AND JAM-NUT MOUNTING RECEPTACLE AND PLUG TYPES: THREAD AND TEETH FOR ACCESSORY ATTACHMENT
Y HERMETICALLY SEALED

FINISH

A SILVER TO LIGHT IRIDESCENT YELLOW COLOR CADMIUM PLATE OVER NICKEL (CONDUCTIVE), -65°C TO +150C° (INACTIVE FOR NEW DESIGN)
B OLIVE DRAB CADMIUM PLATE OVER SUITABLE UNDERPLATE (CONDUCTIVE), -65°C TO +175°C
C ANODIC (NONCONDUCTIVE), -65°C TO +175°C
D FUSED TIN, CARBON STEEL (CONDUCTIVE), -65°C TO 150°C
E CORROSION RESISTANT STEEL (CRES), PASSIVATED (CONDUCTIVE), -65°C TO +200°C
F ELECTROLESS NICKEL COATING (CONDUCTIVE), -65°C TO +200°C
N HERMETIC SEAL OR ENVIRONMENT RESISTING CRES (CONDUCTIVE PLATING), -65°C TO +200°C

CONTACT STYLE

A WITHOUT PIN CONTACTS
B WITHOUT SOCKET CONTACTS
C FEED THROUGH
P PIN CONTACTS-INCLUDING HERMETICS WITH SOLDER CUPS
S SOCKET CONTACTS-INCLUDING HERMETICS WITH SOLDER CUPS
X PIN CONTACTS WITH EYELET (HERMETIC)
Z SOCKET CONTACTS WITH EYELET (HERMETIC)

POLARIZATION

A, B, C, OR D NORMAL-NO LETTER REQUIRED

FIGURE 11-35. Connector information example.

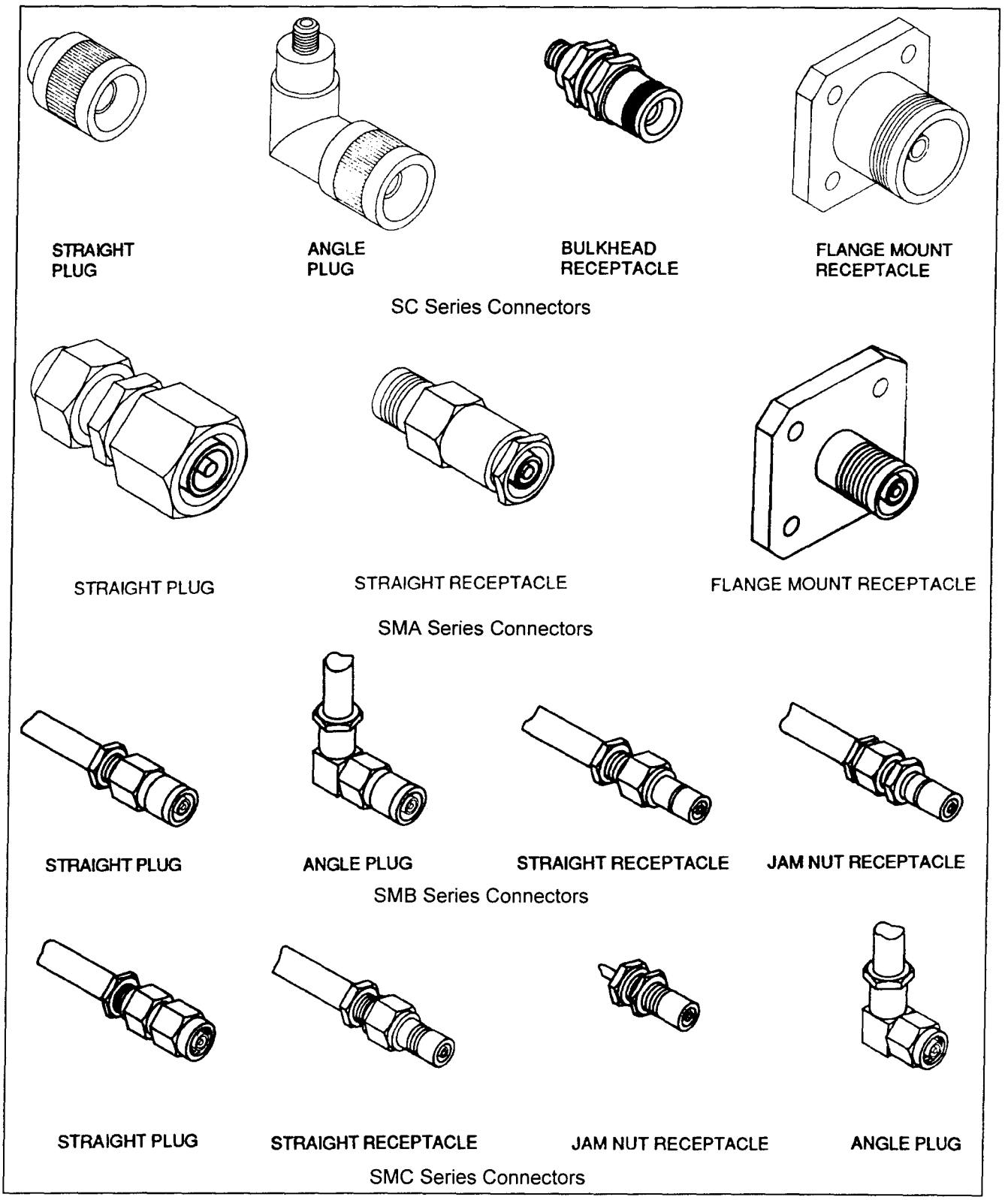

FIGURE 11-37. Coax cable connectors (continued).

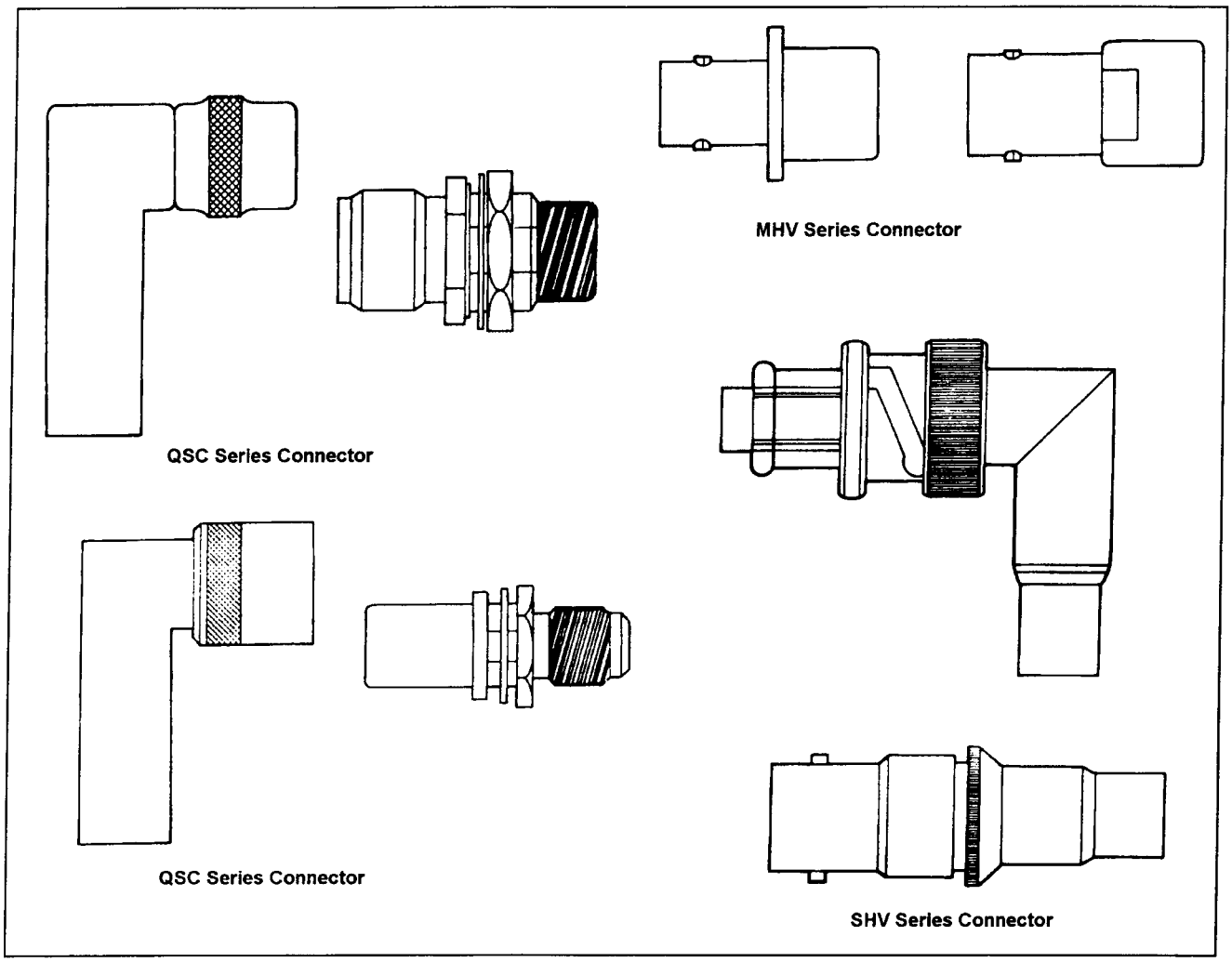

FIGURE 11-37. Coax cable connectors (continued).

When used as grounding modules, they save and reduce hardware installation on the aircraft. Standardized modules are available with wire end grommet seals for environmental applications and are track-mounted. Function module blocks are used to provide an easily wired package for environment-resistant mounting of small resistors, diodes, filters, and suppression networks. In-line terminal junctions are sometimes used in lieu of a connector when only a few wires are terminated and when the ability to disconnect the wires is desired. The in-line terminal junction is environment-resistant. The terminal junction splice is small and may be tied to the surface of a wire bundle when approved by the OAM.

11-233. VOLTAGE AND CURRENT RATING. Selected connectors must be rated for continuous operation under the maximum combination of ambient temperature and circuit current load. Hermetic connectors and connectors used in circuit applications involving high-inrush currents should be derated. It is good engineering practice to conduct preliminary testing in any situation where the connector is to operate with most or all of its contacts at maximum rated current load. When wiring is operating with a high conductor temperature near its rated temperature, connector contact sizes should be suitably rated for the circuit load. This may require an increase in wire size also. Voltage derating is required when connectors are used at high altitude in

SECTION 19. UNUSED CONNECTORS AND UNUSED WIRES

11-260. GENERAL. Connectors may have one or more contact cavities that are not used. Depending on the connector installation, unused connector contact cavities may need to be properly sealed to avoid damage to the connector, or have string wire installed. Unused wires can be secured by tying into a bundle or secured to a permanent structure; individually cut with strands even with insulation; or pre-insulated closed end connector or 1 inch piece of insulating tubing folded and tied back.

11-261. QUICK REFERENCE CHART. A quick reference chart of unused connector contact cavity requirements is given in table 11-25. These requirements apply to harness manufacturing or connector replacement only.

11-262. UNPRESSURIZED AREA CONNECTORS. Connectors may be installed in unpressurized areas of the aircraft. Unused connector contact cavities installed in unpressurized areas should be properly sealed as follows:

a. Firewall Connectors Installations. Firewall unused connector contact cavities should be filled with spare contacts and stub wires. (See figure 11-39.)

(1) Construct stub wires using high temperature wire (260 °C). Ensure that stub wires are of the same type of wires in the bundle.

(2) Crimp the proper contact, for the connector and cavity being used, onto the wire. Install the crimped contact into the unused cavity.

(3) Extend stub wires beyond the back of the connector clamp from 1.5 to 6 inches. Feather trim stub wires to taper wire bundle.

(4) Secure wire ends with high temperature (greater than 250 °C) lacing cord. Nylon cable ties are not allowed for this installation.

NOTE: Both connectors mating through the engine fire-seal are considered firewall connectors. Connectors mounted on or near, but not through, the engine fire-seal are not considered firewall connectors.

b. Non-firewall Connector Installations. In this type of installation all unused connector cavities must also be filled with spare contacts. It is not required, however, to crimp stub wires on filling contacts.

Fill unused contact cavities with spare contacts and Teflon sealing plugs or rods. (See figure 11-40.) Rods shall be cut so that they extend 1/8 to 1/4 inch beyond the surface of the grommet when bottomed against the end of the spare contact. (See table 11-26 for dimensions.)

11-263. PRESSURIZED AREAS. Connectors installed in pressurized areas of the aircraft may be divided into two main installation categories, sealed and unsealed.

a. Sealed connector installations. Sealed connectors installed in pressurized areas must have their unused contact cavities filled with Teflon sealing plugs or rods. (See figure 11-40.) Installation of spare contacts is optional, except for future wiring addition requirements. (See paragraph 11-234). No stub wires are required.

b. Unsealed Connector Installations. It is not required to fill unused contact cavities of unsealed connectors installed in pressurized areas with Teflon sealing plugs or rods. Installation of spare contacts is optional, except for future wiring addition requirements. (See paragraph 11-234.)

TABLE 11-25. Contact cavity sealing-quick reference.

Sealing Means	Connector Installation Types	
	Unpressurized Area	
	Firewall	Non-Firewall
Sealing Plugs or Teflon Sealing Rods	No	Yes
Stub Wires (Note 2)	Yes	No
Spare Contacts	Yes	Yes

NOTE 1: Sealing plugs may be included with the spare connector and may be used for sealing unused contacts. Sealing rods are procured from stock by the foot. (See table 11-26 for sealing rod dimensions.)

NOTE 2: Stub wires must be of the same type as the other wires of the bundle.

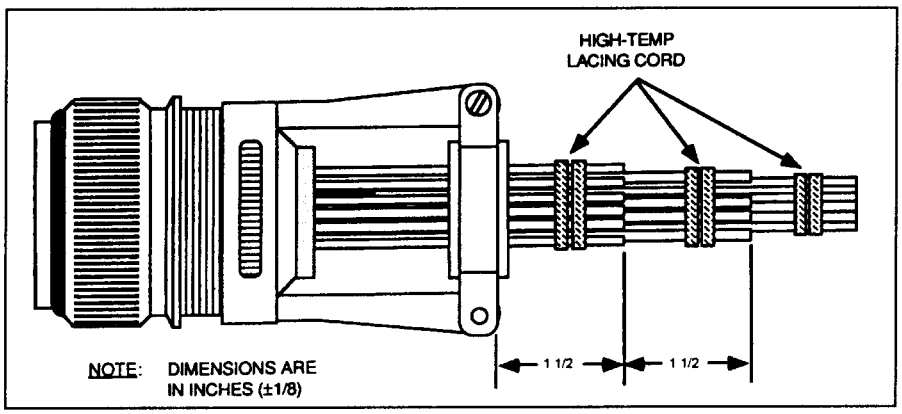

FIGURE 11-39. Stub wire installation.

TABLE 11-26. Sealing rod dimensions.

CONTACT SIZE (AWG)	DIAMETER (INCHES)	ROD LENGTH (INCHES)	
		MIN	MAX
20	1/16	5/8"	3/4"
16	3/32	7/8"	1"
12	1/8	7/8"	1"

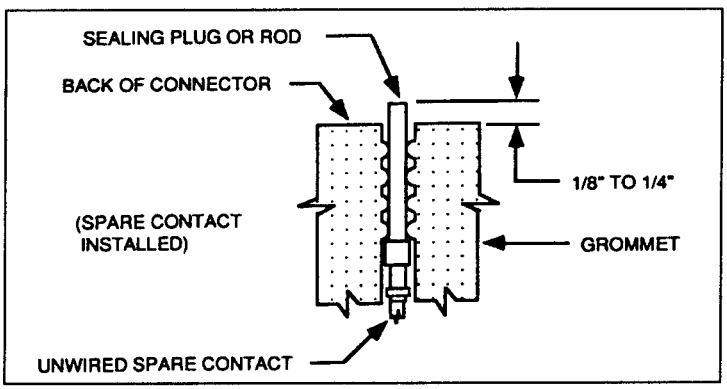

FIGURE 11-40. Sealing unused contact cavities-unpressurized areas-(cut-away view).

11-264.—11-270. [RESERVED.]

TABLE 11-27. Electronic/Electrical Symbols (continued).

Symbol	Meaning
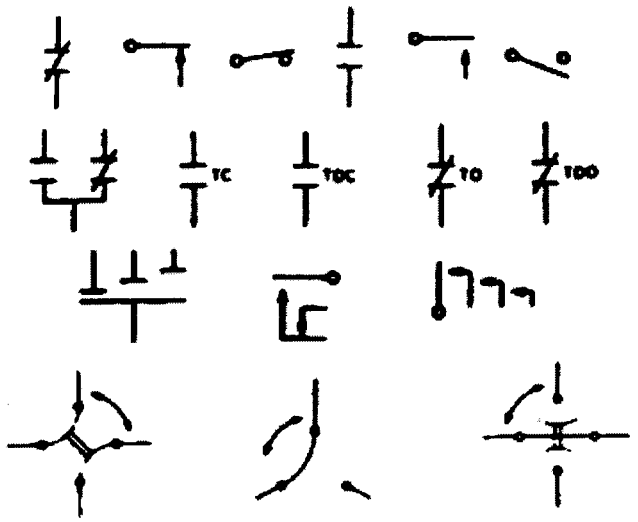	Basic Contact Assemblies
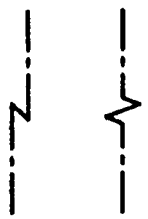	Magnetic Blowout Coil
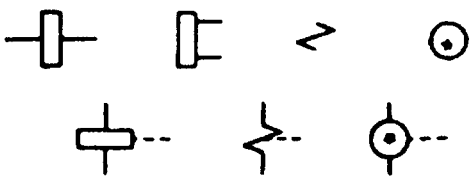	Operating Coil Relay Coil
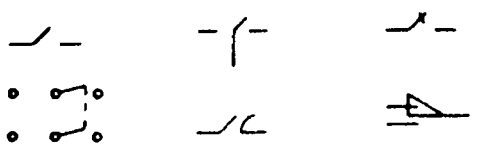	Switch
	Pushbutton, Momentary, or Spring-Return

TABLE 11-27. Electronic/Electrical Symbols (continued).

Symbol	Meaning
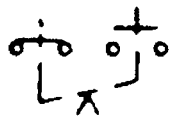	Two-Circuit, Maintained, or Not Spring-Return
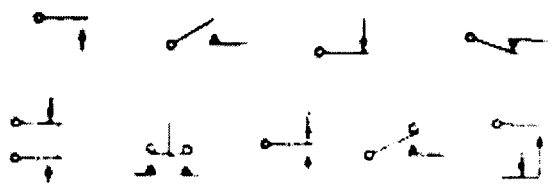	Nonlocking Switching, Momentary, or Spring-Return
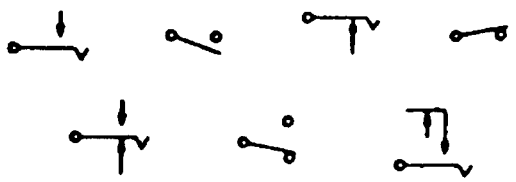	Locking Switch
	Combination Locking and Nonlocking Switch
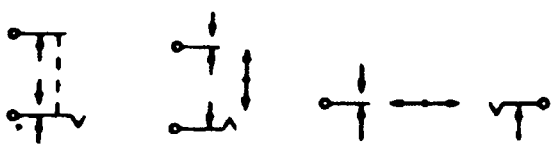	Key-Type Switch Lever Switch

SECTION 2. GROUND OPERATIONAL CHECKS FOR AVIONICS EQUIPMENT (ELECTRICAL)

12-8. GENERAL. When the operating or airworthiness regulations require a system to perform its intended function, the use of the Technical Standard Order (TSO) equipment or the submission of data substantiating the equipment performance is strongly recommended. An operation check of avionics is the responsibility of the pilot in command. However, it is recommended that after replacement of equipment during 100 hour or annual inspections, an operational check of avionics equipment be performed. The accomplishments of these checks must be done in accordance with the recommendations and procedures set forth in the aircraft's flight manual instructions published by the avionics equipment manufacturers.

12-9. INSPECTION OF AVIONICS SYSTEMS.

a. The inspection shall include the following:

(1) Inspect the condition and security of equipment including the proper security of wiring bundles.

(2) Check for indications of overheating of the equipment and associated wiring.

(3) Check for poor electrical bonding. The bonding requirements are specified by equipment manufacturers. Installation cabling should be kept as short as possible, except for antenna cables which are usually precut or have a specific length called out at installation. Proper bonding on the order of 0.003 ohms is very important to the performance of avionics equipment.

(4) Check to assure that the radios and instruments are secured to the instrument panel.

(5) Check that all avionics are free of dust, dirt, lint, or any other airborne contaminates. If there is a forced air cooling system, it must be inspected for proper operation. Equipment ventilation openings must not be obstructed.

(6) Check the microphone headset plugs and connectors and all switches and controls for condition and operation. Check all avionics instruments for placards. Check lightening, annunciator lights, and cockpit interphone for proper operation.

(7) The circuit breaker panel must be inspected for the presence of placarding for each circuit breaker installed.

(8) Check the electrical circuit switches, especially the spring-load type for proper operation. An internal failure in this type of switch may allow the switch to remain closed even though the toggle or button returns to the OFF position. During inspection, attention must be given to the possibility that improper switch substitution may have been made.

b. Inspect antennas for:

(1) broken or missing antenna insulators

(2) lead through insulators

(3) springs

(4) safety wires

(5) cracked antenna housing

(6) missing or poor sealant at base of antenna

(7) correct installation

(8) signs of corrosion, and

(9) the condition of paint/bonding and grounding.

(10) Check the bonding of each antenna from mounting base to the aircraft skin. Tolerance: .1 ohm, maximum.

(a) Test Equipment:

1 1502B Metallic Time Domain Reflectometer or equivalent.

2 Thruline Wattmeter.

(b) Perform the antenna evaluation check using the domain reflectometer to determine the condition of the antenna and coax cables. Refer to manufacturer's maintenance procedures.

(c) Use thruline wattmeter as needed for addition evaluation. Refer to manufacturer's maintenance procedures. Check for the following:

1 Resistance.

2 Shorts.

3 Opens.

c. Inspect the static dischargers/wicks for:

(1) physical security of mounting attachments, wear or abrasion of wicks, missing wicks, etc.,

(2) assurance that one inch of the inner braid of flexible vinyl cover wicks extends beyond the vinyl covering,

(3) assurance that all dischargers are present and securely mounted to their base,

(4) assurance that all bases are securely bonded to skin of aircraft in order to prevent the existence in voltage level differences between two surfaces,

(5) signs of excessive erosion or deterioration of discharger tip,

(6) lighting damage as evidenced by pitting of the metal base, and

(7) megohm value of static wick itself as per manufacturer's instructions. It should not be open.

d. Subsequent inspection must be made after a maintenance action on a transponder. Refer to Title 14 of the Code of Federal Regulations (14 CFR) part 91, sections 91.411 and 91.413.

e. Inspection of the emergency locator transmitter operation, condition and date of the battery.

f. Perform a function check of the radio by transmitting a request for a radio check. Perform a function check on navigation equipment by moving the omni bearing selection (OBS) and noting the needle swing and the TO/FROM flag movement.

12-10. COMMUNICATION SYSTEMS. Ground operation of communication systems in aircraft may be accomplished in accordance with the procedures appropriate for the airport and area in which the test is made and the manufacturer's manuals and procedures. Check system(s) for side tone, clarity of

transmission, squelch, operations using head phones, speaker(s), and hand microphone. If a receiver or transmitter is found to be defective, it should be removed from the aircraft and repaired.

12-11. VHF OMNI-DIRECTIONAL RANGE (VOR). A VOR operates within the 108.0 to 111.85 MHz, and 112.0 to 117.95 MHz frequency bands. The display usually consists of a deviation indicator and a TO/FROM indicator. The controls consist of a frequency selector for selecting the ground station and an OBS, which is used for course selection. An ON/OFF flag is used to determine adequate field strength and presence of a valid signal. There are numerous configurations when integrated into flight directors and/or when using a slaved compass system, which uses an additional indicator that points continually to the selected omni station regardless of OBS selection. In order to determine the accuracy specified in a functional check, a ground test set must be used in accordance with the manufacturer's specifications. For the purpose of this inspection/maintenance activity, the following operational check can be accomplished to determine if the equipment has the accuracy required for operation in instrument flight rules (IFR) environment. Verify audio identification, OBS operation, flag operation, radio magnetic indicator (RMI) interface, and applicable navigation (NAV) switching functions. The operational check is also published in the AIM, section 1-1-4. This check is required by 14 CFR part 91, section 91.171 before instrument flight operations.

12-12. DISTANCE MEASURING EQUIPMENT (DME). The operation of DME consists of paired pulses at a specific spacing, sent out from the aircraft (this is what is called interrogation), and are received by the ground station, which then responds with paired pulses at the specific spacing sent by the aircraft, but at a different frequency. The aircraft unit measures the time it takes to transmit and then receive the signal, which then is translated into distance. DME operates on frequencies from 962 MHz to 1213 MHz. Because of the curvature of earth, this line-of-sight signal is reliable up to 199 nautical mile (NM) at the high end of the controlled airspace with an accuracy of 1/2 mile or 3 percent of the distance. DME inspection/maintenance on the aircraft is most commonly limited to a visual check of the installation, and if there have been previously reported problems, the antenna must be inspected for proper bonding and the absence of corrosion, both on the mounting surface, as well as the coax connector. Accuracy can be determined by evaluating performance during flight operations, as well as with ground test equipment. If a discrepancy is reported and corrected, it is good practice to make the accuracy determination before instrument flight. Tune the DME to a local station, or use the proper ground test equipment to check audio identification, and DME hold function verify correct display operation.

12-13. AUTOMATIC DIRECTION FINDER (ADF). The ADF receivers are primarily designed to receive nondirectional beacons (NDB) in the 19 to 535 kHz amplitude modulation (AM) broadcast low band. The receivers will also operate in the commercial AM band. The ADF display pointer will indicate the relative bearing to a selected AM band transmitter that is in range. An ADF system must be checked by tuning to an adequate NDB or commercial AM station. Verify proper bearing to station, audio identification and tone/beat frequency oscillator (BFO), correct operation in closed circuit (LOOP) and sense modes. Note the orientation of the selected station to the aircraft using an appropriate chart. Observe the ADF relative bearing reading, and compare to the chart. Slew the needle and observe how fast (or slowly) it returns to the reading. ADF performance may

be degraded by lightning activity, airframe charging, ignition noise and atmospheric phenomena.

12-14. INSTRUMENT LANDING SYSTEMS (ILS). The ILS consist of several components, such as the localizer, glide slope, marker beacon, radio altimeter, and DME. Localizer and glide slope receivers and marker beacons will be discussed in this section.

a. Localizer receiver operates on one of 40 ILS channels within the frequency range of 108.10 to 111.95 MHz (odd tens). These signals provide course guidance to the pilot to the runway centerline through the lateral displacement of the VOR/localizer (LOC) deviation indicator. The ground transmitter is sighted at the far end of the runway and provides a valid signal from a distance of 18 NM from the transmitter. The indication gives a full fly left/right deviation of 700 feet at the runway threshold. Identification of the transmitter is in International Morse Code and consists of a three letter identifier preceded by the Morse Code letter I (two dots). The localizer function is usually integral with the VOR system, and when maintenance is performed on the VOR unit, the localizer is also included. The accuracy of the system can be effectively evaluated through normal flight operations if evaluated during visual meteorological conditions. Any determination of airworthiness after reinstallation before instrument flight must be accomplished with ground test equipment.

b. The glide slope receiver operates on one of 40 channels within the frequency range 329.15 MHz, to 335.00 MHz. The glide slope transmitter is located between 750 feet and 1250 feet from the approach end of the runway and offset 250 to 650 feet. In the absence of questionable performance, periodic functional flight checks of the glide slope system would be an acceptable way to ensure continued system performance. The functional flight test must be conducted under visual flight rules (VFR) conditions. A failed or misleading system must be serviced by an appropriately-rated repair station. Ground test equipment can be used to verify glide slope operation.

c. Localizer/Glide Slope (LOC/GS) may have self test function, otherwise the proper ground test equipment must be used. Refer to manufacturer's or aircraft instruction manual.

12-15. MARKER BEACON. Marker beacon receivers operate at 75 MHz and sense the audio signature of each of the three types of beacons. The marker beacon receiver is not tunable. The blue outer marker light illuminates when the receiver acquires a 75 MHz signal modulated with 400 Hz, an amber middle marker light for a 75 MHz signal modulated with 1300 Hz and, a white inner marker light for a 75 MHz signal modulated with 3000 Hz. The marker beacon system must be operationally evaluated in VFR when an ILS runway is available. The receiver sensitivity switch must be placed in LOW SENSE (the normal setting). Marker audio must be adequate. Ground test equipment must be used to verify marker beacon operation. Marker beacon with self test feature, verify lamps, audio and lamp dimming.

12-16. LONG RANGE NAVIGATION (LORAN). The LORAN has been an effective alternative to Rho/Theta R-Nav systems. Hyperbolic systems require waypoint designation in terms of latitude and longitude, unlike original R-Nav (distance navigation) systems, which define waypoints in terms of distance (Rho) and angle (Theta) from established VOR or Tacan facilities. Accuracy is better than the VOR/Tacan system but LORAN is more prone to problems with precipitation static. Proper bonding of aircraft structure and the use of high-quality static wicks will not only produce improved LORAN system performance, but can also benefit the very high frequency

(VHF) navigation and communications systems. This system has an automatic test equipment (ATE).

NOTE: Aircraft must be outside of hangar for LORAN to operate.

Normally self test check units, verification of position, and loading of flight plan will verify operation verification of proper flight manual supplements and operating handbooks on board, and proper software status can also be verified.

12-17. GLOBAL POSITIONING SYSTEM (GPS). The GPS is at the forefront of present generation navigation systems. This space-based navigation system is based on a 24-satellite system and is highly accurate (within 100 meters) for establishing position. The system is unaffected by weather and provides a world-wide common grid reference system. Database updating and antenna maintenance are of primary concern to the GPS user.

NOTE: Aircraft must be outside of hangar for ground test of GPS.

12-18. AUTOPILOT SYSTEMS. Automatic Flight Control Systems (AFCS) are the most efficient managers of aircraft performance and control. There are three kinds of autopilot; two axes, three axes, and three axes with coupled approach capability. Attention must be given to the disconnect switch operation, aural and visual alerts of automatic and intentional autopilot disconnects, override forces and mode annunciation, servo operation, rigging and bridle cable tension, and condition. In all cases the manufacturer's inspection and maintenance instructions must be followed.

12-19. ALTIMETERS. Aircraft conducting operations in controlled airspace under instrument flight rule (IFR) are required to have their static system(s) and each altimeter instrument inspected and tested within the previous 24 calendar months. Frequent functional checks of all altimeters and automatic pressure altitude reporting systems are recommended.

a. The tests required must be performed by:

(1) The manufacturer of the aircraft on which the tests and inspection are to be performed.

(2) A certificated repair station properly equipped to perform those functions and holding:

(a) An instrument rating Class I.

(b) A limited instrument rating appropriate to the make and model of appliance to be tested.

(c) A certified/qualified mechanic with an airframe rating(static system tests and inspections only). Any adjustments shall be accomplished only by an instrument shop certified/qualified person using proper test equipment and adequate reference to the manufacturer's maintenance manuals. The altimeter correlation adjustment shall not be adjusted in the field. Changing this adjustment will nullify the correspondence between the basic test equipment calibration standards and the altimeter. It will also nullify correspondence between the encoding altimeter and its encoding digitizer or the associated blind encoder.

b. Examine the altimeter face for evidence of needle scrapes or other damage. Check smoothness of operation, with particular attention to altimeter performance during decent.

c. Contact an appropriate air traffic facility for the pressure altitude displayed to the controller from your aircraft. Correct the reported altitude as needed, and compare to the

reading on the altimeter instrument. The difference must not exceed 125 feet.

12-20. TRANSPONDERS. There are three modes (types) of transponders that can be used on various aircraft. Mode A provides a (non altitude-reporting) four-digit coded reply; Mode C provides a code reply identical to Mode A with an altitude-reporting signal; and Mode S has the same capabilities as Mode A and Mode C and responds to traffic alert and collision avoidance system (TCAS)-Equipped Aircraft.

a. Ground ramp equipment must be used to demonstrate proper operation. Enough codes must be selected so that each switchposition is checked at least once. Low and high sensitivity operation must be checked. Identification operation must be checked. Altitude reporting mode must be demonstrated. Demonstrate that the transponder system does not interfere with other systems aboard the aircraft, and that other equipment does not interfere with transponder operation. Special consideration must be given to other pulse equipment, such as DME and weather radar.

b. All transponders must be tested every 24-calendar months, or during an annual inspection, if requested by the owner. The test must be conducted by an authorized avionics repair facility.

12-21. EMERGENCY LOCATOR TRANS- MITTERS (ELT). The ELT must be evaluated in accordance with TSO-C91a, TSO-C126 for 406 MHz ELT's, or later TSO's issued for ELT's. ELT installations must be examined for potential operational problems at least once a year (section 91.207(d)). There have been numerous instances of interaction between ELT and other VHF installations. Antenna location should be as far as possible from other antennas to prevent efficiency losses. Check ELT antenna installations in close proximity to other VHF antennas for suspected interference. Antenna patterns of previously installed VHF antennas could be measured after an ELT installation. Tests should be conducted during the first 5 minutes after any hour. If operational tests must be made outside of this time frame, they should be coordinated with the nearest FAA Control Tower or FSS. Tests should be no longer than three audible sweeps.

12-22. INSPECTION OF ELT. An inspection of the following must be accomplished by a properly certified person or repair station within 12-calendar months after the last inspection:

a. Proper Installation.

(1) Remove all interconnections to the ELT unit and ELT antenna. Visually inspect and confirm proper seating of all connector pins. Special attention should be given to coaxial center conductor pins, which are prone to retracting into the connector housing.

(2) Remove the ELT from the mount and inspect the mounting hardware for proper installation and security.

(3) Reinstall the ELT into its mount and verify the proper direction for crash activation. Reconnect all cables. They should have some slack at each end and should be properly secured to the airplane structure for support and protection.

b. Battery Corrosion. Gain access to the ELT battery and inspect. No corrosion should be detectable. Verify the ELT battery is approved and check its expiration date.

c. Operation of the Controls and Crash Sensor. Activate the ELT using an applied force. Consult the ELT manufacturer's instructions before activation. The direction for mounting and force activation is indicated on

the ELT. A TSO-C91 ELT can be activated by using a quick rap with the palm. A TSO-C91a ELT can be activated by using a rapid forward (throwing) motion coupled by a rapid reversing action. Verify that the ELT can be activated using a watt meter, the airplane's VHF radio communications receiver tuned to 121.5 MHz, or other means (see NOTE 1). Insure that the "G" switch has been reset if applicable.

d. For a Sufficient Signal Radiated From its Antenna. Activate the ELT using the ON or ELT TEST switch. A low-quality AM broadcast radio receiver should be used to determine if energy is being transmitted from the antenna. When the antenna of the AM broadcast radio receiver (tuning dial on any setting) is held about 6 inches from the activated ELT antenna, the ELT aural tone will be heard (see NOTE 2 and 3).

e. Verify that All Switches are Properly Labeled and Positioned.

f. Record the Inspection. Record the inspection in the aircraft maintenance records according to 14 CFR part 43, section 43.9. We suggest the following:

I inspected the Make/Model _____ ELT system in this aircraft according to applicable Aircraft and ELT manufacturer's instructions and applicable FAA guidance and found that it meets the requirements of section 91.207(d).

Signed: _____
Certificate No. _____
Date: _____

NOTE 1: This is not a measured check; it only indicates that the G-switch is working.

NOTE 2: This is not a measured check; but it does provide confidence that the antenna is radiating with sufficient power to aid search and rescue. The signal may be weak even if it is picked up by an aircraft VHF receiver located at a considerable distance from the radiating ELT. Therefore, this check does not check the integrity of the ELT system or provide the same level of confidence as does the AM radio check.

NOTE 3: Because the ELT radiates on the emergency frequency, the Federal Communications Commission allows these tests only to be conducted within the first five minutes after any hour and is limited in three sweeps of the transmitter audio modulation.

12-23. FLIGHT DATA RECORDER. The flight data recorder is housed in a crush-proof container located near the tail section of the aircraft. The tape unit is fire resistant, and contains a radio transmitter to help crash investigators locate the unit under water. Inspection/Operational checks include:

a. Check special sticker on front of the flight data recorder for the date of the next tape replacement, if applicable.

b. Remove recorder magazine and inspect tape for the following:

(1) broken or torn tape,

(2) proper feed of tape, and

(3) all scribes were recording properly for approximately the last hour of flight.

c. Conditions for tape replacement (as applicable):

(1) There is less than 20 hours remaining in the magazine as read on the *tape remaining* indicator.

(2) Tape has run out.

(3) Broken tape.

(4) After hard landings and severe air turbulence have been encountered as reported by the pilots. After the same tape has been in use 1 year (12 months), it must be replaced.

(5) Ensure that a correlation test has been performed and then recorded in the aircraft records.

d. Refer to the specific equipment manufacturer's manuals and procedures.

e. The state-of-the art Solid-State Flight Data Recorder (SSFDR) is a highly flexible model able to support a wide variety of aeronautical radio, incorporated (ARINC) configurations. It has a Built-In Test Equipment (BITE) that establishes and monitors the mission fitness of the hardware. BITE performs verification after storage (read after write) of flight data and status condition of the memory. These recorders have an underwater acoustic beacon mounted on its front panel which must be returned to their respective manufacturer's for battery servicing. For maintenance information refer to the equipment or aircraft manufacture's maintenance instruction manual.

12-24. COCKPIT VOICE RECORDERS (CVR). CVR's are very similar to flight data recorders. They look nearly identical and operate in almost the same way. CVR's monitors the last 30 minutes of flight deck conversations and radio communications. The flight deck conversations are recorded via the microphone monitor panel located on the flight deck. This panel is also used to test the system and erase the tape, if so desired. Before operating the erase CVR mode, consult the operational manual of the manufacturer for the CVR.

a. Playback is possible only after the recorder is removed from the aircraft.

b. Refer to the specific equipment manufacturer's manuals and procedures.

c. The Solid State Cockpit Voice Recorder system is composed of three essential components a solid state recorder, a control unit (remote mic amplifier), and an area microphone. Also installed on one end of the recorder is an Under water Locator Beacon (ULB). The recorder accepts four separate audio inputs: pilot, copilot, public address/third crew member, and cockpit area microphone and where applicable, rotor speed input and flight data recorder synchronization tone input. For maintenance information refer to the equipment manufacturer's maintenance manual.

12-25. WEATHER RADAR. Ground performance shall include antenna rotation, tilt, indicator brilliance, scan rotation, and indication of received echoes. It must be determined that no objectionable interference from other electrical/electronic equipment appears on the radar indicator, and that the radar system does not interfere with the operation of any of the aircraft's communications or navigation systems.

CAUTION: Do not turn radar on within 15 feet of ground personnel, or containers holding flammable or explosive materials. The radar should never operate during fueling operations. Do not operate radar system when beam may intercept larger metallic objects closer than 150 feet, as crystal damage might occur. Do not operate radar when cooling fans are inoperative. Refer to the specific Ra

dar System equipment manufacturer's manuals and procedures.

12-26. RADOME INSPECTION. Inspection of aircraft having weather radar installations should include a visual check of the radome surface for signs of surface damage, holes, cracks, chipping, and peeling of paint, etc. Attach fittings and fastenings, neoprene erosion caps, and lightening strips, when installed, should also be inspected.

12-27. DATA BUS. Data Buses provide the physical and functional partitioning needed to enable different companies to design different avionics boxes to be able to communicate information to each other. It defines the framework for system(s) intergration. There are several types of data bus analyzers used to receive and review transmitted data or to transmit data to a bus user. Before using an analyzer, make sure that the bus language is compatible with the bus analyzer. For further information refer to ARINC specifications such as 429 Digital Information Transfer System, Mark 33 which offers simple and affordable answers to data communications on aircraft.

12-28. ELECTRIC COMPATABLITY. When replacing an instrument with one which provides additional functions or when adding new instruments, check the following electrical (where applicable) for compatibility:

a. Voltage (AC/DC).
b. Voltage polarity (DC).
c. Voltage phase (s) (AC).
d. Frequency (AC).
e. Grounding (AC/DC).
f. System impedance matching.
g. Compatibility with system to which connected.

12-29.—12-36. [RESERVED.]

SECTION 3. GROUND OPERATIONAL CHECKS FOR AVIONICS EQUIPMENT (NON ELECTRICAL)

12-37. COMPASS SWING must be performed whenever any ferrous component of the system (i.e. flux valve compensator, or Standby Compass) is installed, removed, repaired, or a new compass is installed. The magnetic compass can be checked for accuracy by using a compass rose located on an airport. The compass swing is normally effected by placing the aircraft on various magnetic headings and comparing the deviations with those on the deviation cards. Refer to CFR14, 23.1327, 14 CFR 23.1547, and the equipment or aircraft manufacturer's manual.

a. A compass swing must be performed on the following occasions:

(1) When the accuracy of the compass is suspected.

(2) After any cockpit modification or major replacement involving ferrous metal.

(3) Whenever a compass has been subjected to a shock; for example, after a hard landing or turbulence.

(4) After aircraft has passed through a severe electrical storm.

(5) After lighting strike.

(6) Whenever a change is made to the electrical system.

(7) Whenever a change of cargo is likely to affect the compass.

(8) When an aircraft operation is changed to a different geographic location with a major change in magnetic deviation. (e.g., from Miami, Florida to Fairbanks, Alaska.)

(9) After aircraft has been parked on one heading for over a year.

(10) When flux valves are replaced.

b. Precautions.

(1) The magnetic compass must be checked for accuracy in a location free of steel structures, underground pipes or cables, or equipment that produces magnetic fields.

(2) Personnel engaged in the compensation of the compass shall remove all magnetic or ferrous material from their possession.

(3) Use only nonmagnetic tools when adjusting the compass.

(4) Position the aircraft at least 100 yards from any metal object.

(5) All equipment in the aircraft having any magnetic effect on the compass must be secured in the position occupied in normal flight.

c. Compass Swing Procedures.

(1) Have the aircraft taxied to the NORTH (0°) radial on the Compass Rose. Use a hairline sight compass (a reverse reading compass with a gun sight arrangement mounted on top of it) to place the aircraft in the general vicinity. With the aircraft facing North and the person in the cockpit running the engine(s) at 1000 rpm, a mechanic, standing approximately 30 feet in front of the aircraft and facing South, "shoots" or aligns the master compass with the aircraft center line. Using hand signals, the mechanic signals the person in the cockpit to make additional adjustments to align the aircraft with the master

compass. Once aligned on the heading, the person in the cockpit runs the engine(s) to approximately 1,700 rpm to duplicate the aircraft's magnetic field and then the person reads the compass.

NOTE: (1) For conventional gear aircraft, the mechanic will have to position the magnetic compass in the straight and level position or mount the tail of the aircraft on a moveable dolly to simulate a straight and level cruise configuration. (2) Remember the hairline sight compass is only intended to be used as a general piece of test equipment.

(2) If the aircraft compass is not in alignment with the magnetic North of the master compass, correct the error by making small adjustments to the North-South brass adjustment screw with a nonmetallic screw driver (made out of brass stock, or stainless steel welding rod). Adjust the N-S compensator screw until the compass reads North (0°). Turn the aircraft until it is aligned with the East-West, pointing East. Adjust the E-W compensator screw until it reads 90°. Continue by turning the aircraft South 180° and adjust the N-S screw to remove one-half of the South's heading error. This will throw the North off, but the total North-South should be divided equally between the two headings. Turn the aircraft until it is heading West 270°, and adjust the E-W screw on the compensator to remove one-half of the West error. This should divide equally the total E-W error. The engine(s) should be running.

(3) With the aircraft heading West, start your calibration card here and record the magnetic heading of 270° and the compass reading with the avionics/electrical systems on then off. Turn the aircraft to align with each of the lines on the compass rose and record the compass reading every 30°. There should be not more than a plus or minus 10° difference between any of the compass' heading and the magnetic heading of the aircraft.

(4) If the compass cannot be adjusted to meet the requirements, install another one.

NOTE: A common error that affects the compass' accuracy is the mounting of a compass or instruments on or in the instrument panel using steel machine screws/nuts rather than brass hardware, magnetized control yoke, structural tubing, and improperly routed electrical wiring, which can cause unreasonable compass error.

(5) If the aircraft has an electrical system, two complete compass checks should be performed, one with minimum electrical equipment operating and the other with all electrical accessories on (e.g. radios, navigation, radar, and lights). If the compass readings are not identical, the mechanic should make up two separate compass correction cards, one with all the equipment on and one with the equipment off.

(6) When the compass is satisfactorily swung, fill out the calibration card properly and put it in the holder in full view for the pilot's reference.

d. Standby (wet) Compass. Adjustment and compensation of the Standby Compass may also be accomplished by using the "compass swing" method.

12-38. PNEUMATIC GYROS.

a. Venturi Systems. The early gyro instruments were all operated by air flowing out of a jet over buckets cut into the periphery of the gyro rotor. A venturi was mounted on the outside of the aircraft to produce a low pressure, or vacuum, which evacuated the instrument case, and air flowed into the instrument through a paper filter and then through a nozzle onto the rotor.

(1) Venturi systems have the advantage of being extremely simple and requiring no power from the engine, nor from any of the other aircraft systems; but they do have the disadvantage of being susceptible to ice, and when they are most needed, they may become unusable.

(2) There are two sizes of venturi tubes: those which produce four inches of suction are used to drive the attitude gyros, and smaller tubes, which produce two inches of suction, are used for the turn and slip indicator. Some installations use two of the larger venturi tubes connected in parallel to the two attitude gyros, and the turn and slip indicator is connected to one of these instruments with a needle valve between them. A suction gage is temporarily connected to the turn and slip indicator, and the aircraft is flown so the needle valve can be adjusted to the required suction at the instrument when the aircraft is operated at its cruise speed. (See figure 12-1.)

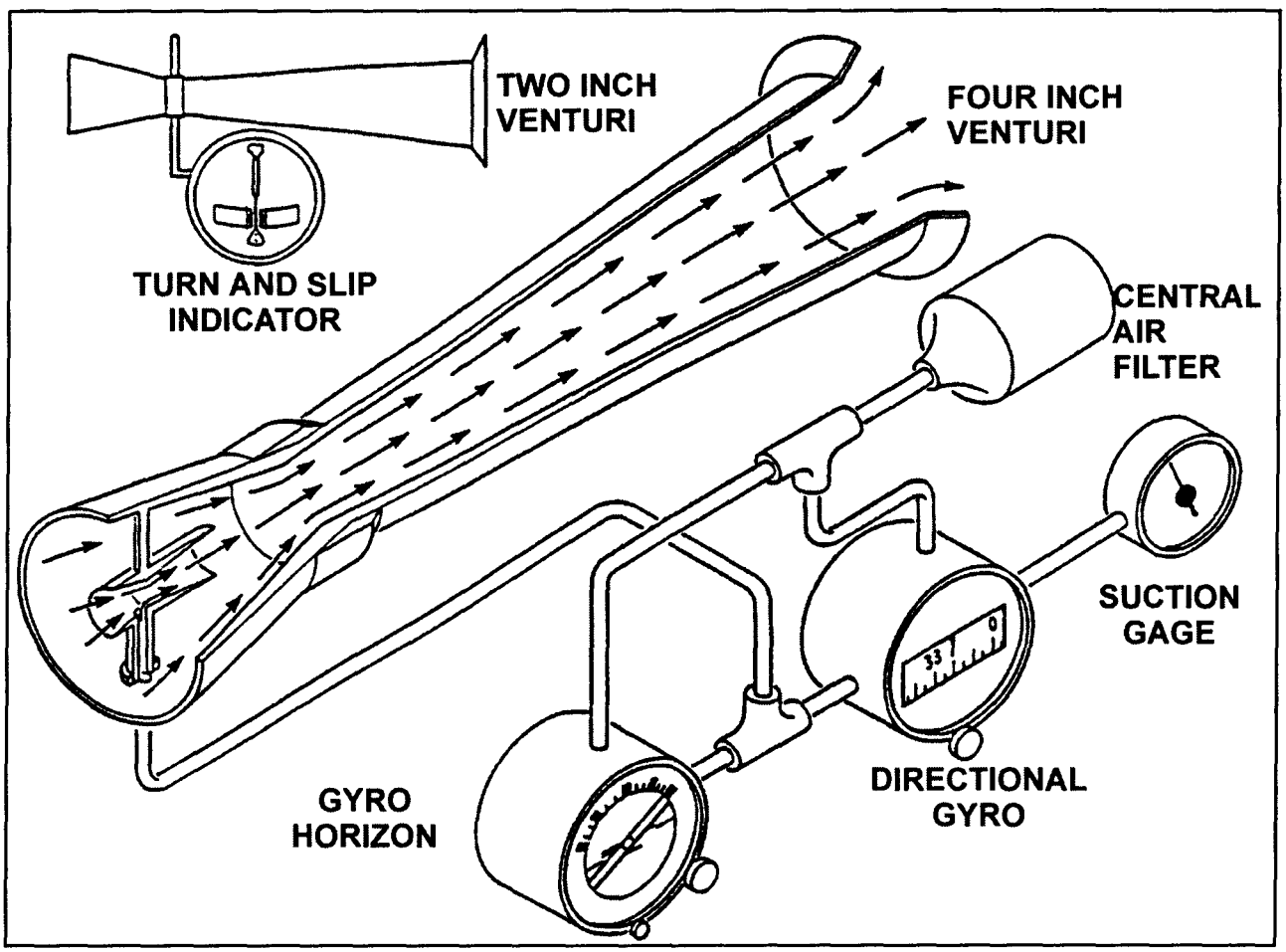

FIGURE 12-1. Venturi system for providing airflow through gyro instruments.

b. Vacuum Pump Systems. In order to overcome the major drawback of the venturi tube, that is, its susceptibility to ice, aircraft were equipped with engine driven vacuum pumps and the gyro instruments were driven by air pulled through the instrument by the suction produced by these pumps. A suction relief valve maintained the desired pressure (usually about four inches of mercury) on the attitude gyro instruments, and a needle valve between one of the attitude indicators and the turn and slip indicator restricted the airflow to maintain the desired 2 inches of suction in its case. Most of the early instruments used only paper filters in each of the instrument cases, but in some installations a central air filter was used to remove contaminants from the cabin air before it entered the instrument case.

(1) The early vacuum pumps were vane-type pumps of what is called the *wet* type-one with a cast iron housing and steel vanes. Engine oil was metered into the pump to provide sealing, lubrication, and cooling, and then this oil, along with the air, was blown through an oil separator where the oil collected on baffles and was returned to the engine crankcase. The air was then exhausted overboard. Aircraft equipped with rubber deicer boots used this discharge air to inflate the boots. But before it could be used, this air was passed through a second stage of oil separation and then to the distributor valve and finally to the boots. (See figure 12-2.)

(2) The airflow through the instruments is controlled by maintaining the suction in the instrument case at the desired level with a suction relief valve mounted between the pump and the instruments. This valve has a spring-loaded poppet that offsets to allow cabin air to enter the pump and maintain the correct negative pressure inside the instrument case.

(3) The more modern vacuum pumps are of the dry type. These pumps use carbon vanes and do not require any lubrication, as the vanes provide their own lubrication as they wear away at a carefully predetermined rate. Other than the fact that they do not require an oil separator, systems using dry air pumps are quite similar to those using a wet pump. One slight difference, however, is in the need for keeping the inside of the pump perfectly clean. Any solid particles drawn into the system through the suction relief valve can damage one of the carbon vanes, and this can lead to destruction of the pump, as the particles broken off of one vane will damage all of the other vanes. To prevent particles entering the relief valve, its air inlet is covered with a filter, and this must be cleaned or replaced at the interval recommended by the aircraft manufacturer.

c. Positive Pressure Systems. Above about 18,000 feet there is not enough mass to the air drawn through the instruments to provide sufficient rotor speed, and, to remedy this problem, many aircraft that fly at high altitude use positive pressure systems to drive the gyros. These systems use the same type of air pump as is used for vacuum systems, but the discharged air from the pump is filtered and directed into the instrument case through the same fitting that receives the filtered air when the vacuum system is used. A filter is installed on the inlet of the pump, and then, before the air is directed into the instrument case, it is again filtered. A pressure regulator is located between the pump and the in-line filter to control the air pressure so only the correct amount is directed into the instrument case.

System Filters. The life of an air-driven gyro instrument is determined to a great extent by the cleanliness of the air that flows over the rotor. In vacuum systems, this air is taken

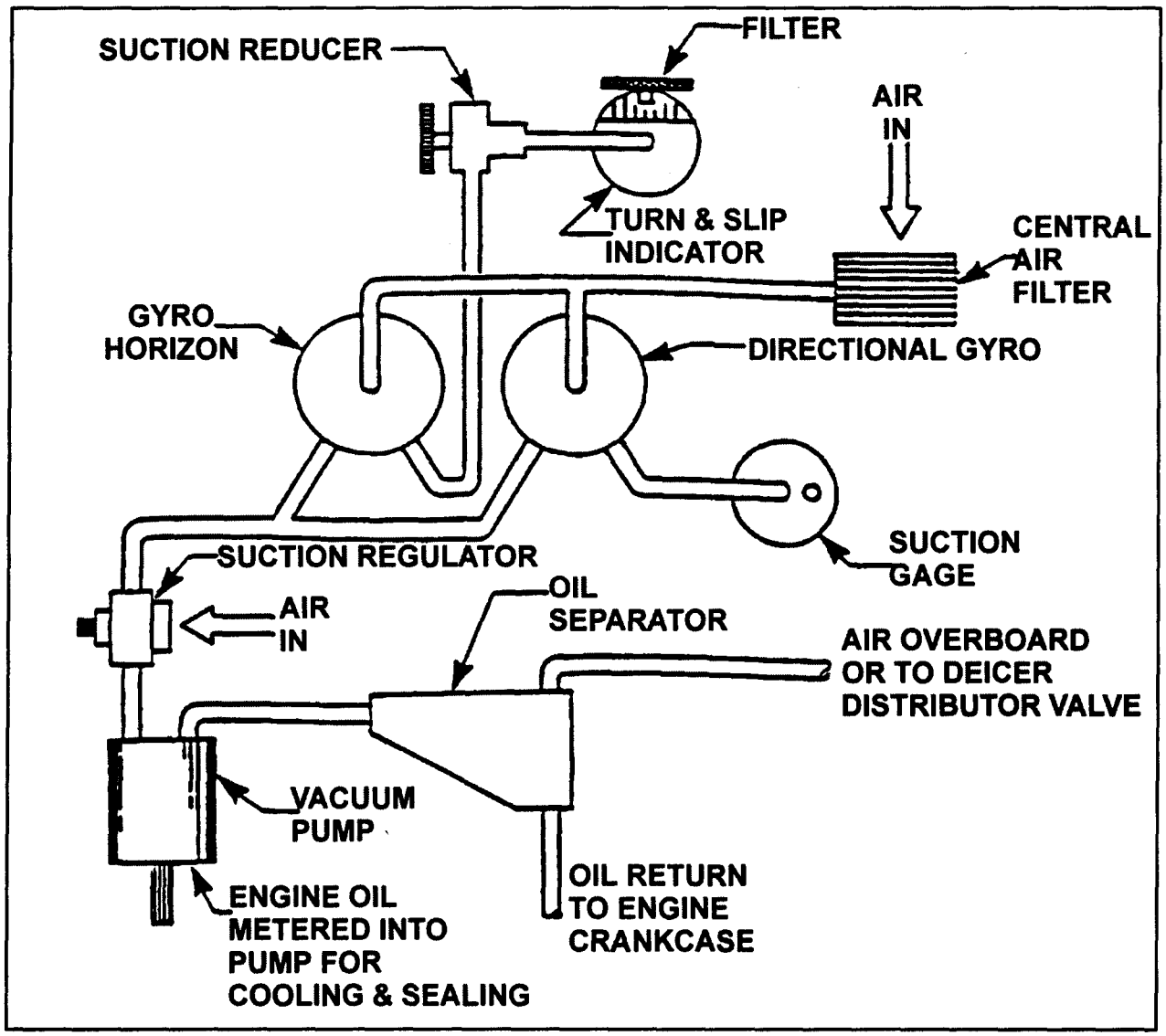

FIGURE 12-2. Instrument vacuum system using a wet-type vacuum pump.

from the cabin where there is usually a good deal of dust and very often tobacco smoke. Unless all of the solid contaminants are removed from the air before it enters the instrument, they will accumulate, usually in the rotor bearings, and slow the rotor. This causes an inaccurate indication of the instrument and will definitely shorten its service life. Dry air pumps are also subject to damage from ingested contaminants, and all of the filters in the system must be replaced on the schedule recommended by the aircraft manufacturer, and more often if the aircraft is operated under particularly dusty conditions, especially if the occupants of the aircraft regularly smoke while flying. (See figures 12-3 and 12-4.)

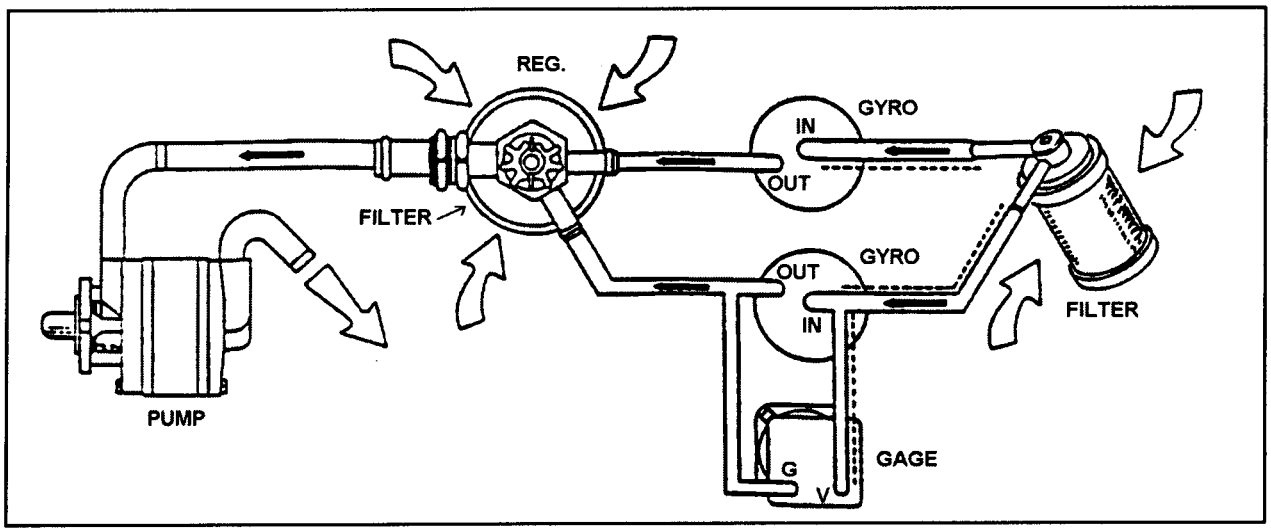

FIGURE 12-3. Instrument vacuum system using a dry-type air pump.

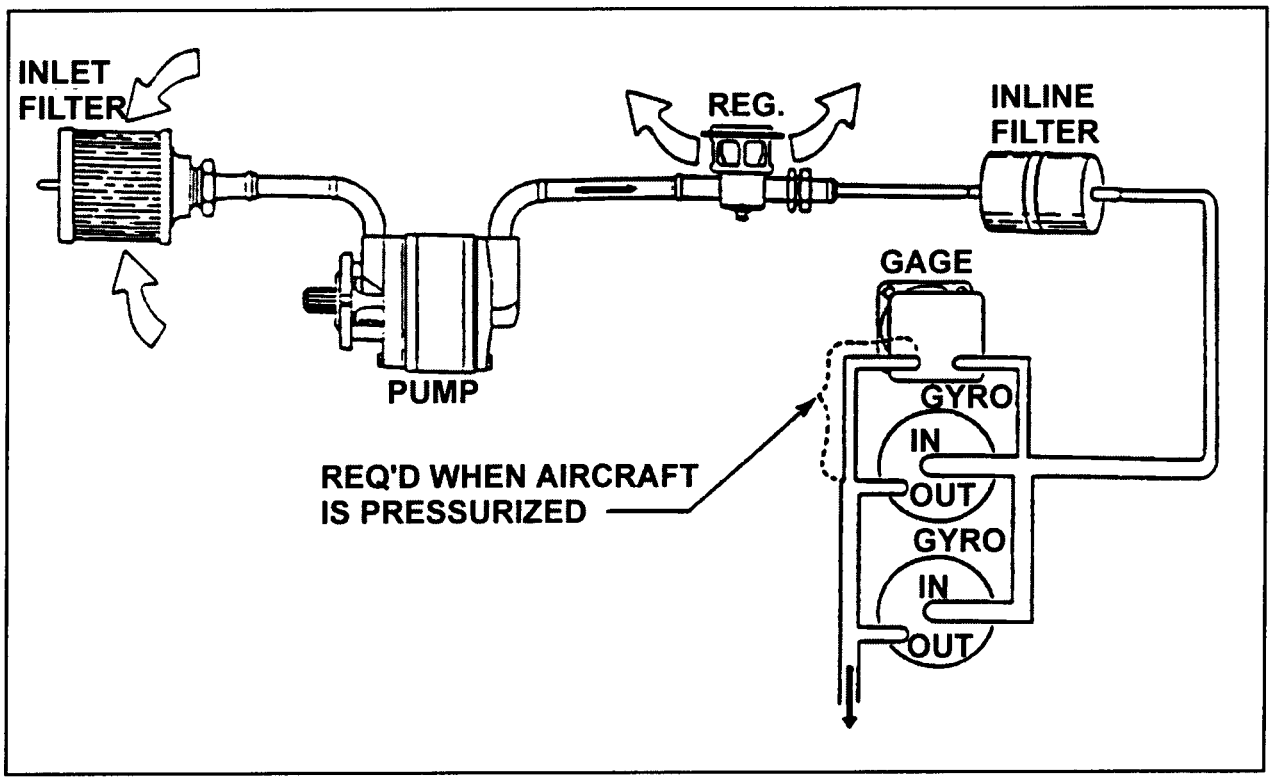

FIGURE 12-4. Instrument pressure system using a dry-type air pump.

12-39.—12-50. [RESERVED.]

SECTION 4. PITOT/STATIC SYSTEMS

12-51. GENERAL. In order for the pitot-static instruments to work properly, they must be connected into a system that senses the impact air pressure with minimum distortion and picks up undisturbed static air pressure.

Pitot pressure is ram air pressure picked up by a small open-ended tube about a ¼-inch in diameter that sticks directly into the air stream that produces a pressure proportional to the speed of the air movement. Static pressure is the pressure of the still air used to measure the altitude and serves as a reference in the measurement of airspeed.

Airspeed requires pitot, altimeter, rate of climb, and transponder-required static.

12-52. SYSTEM COMPONENTS. The conventional design of the pitot system consists of pitot-static tubes or pitot tubes with static pressure parts and vents, lines, tubing, water drains and traps, selector valves, and various pressure-actuated indicators or control units such as the altimeter, airspeed and rate-of-climb indicators, and the encoding altimeter connected to the system. (See figure 12-5.)

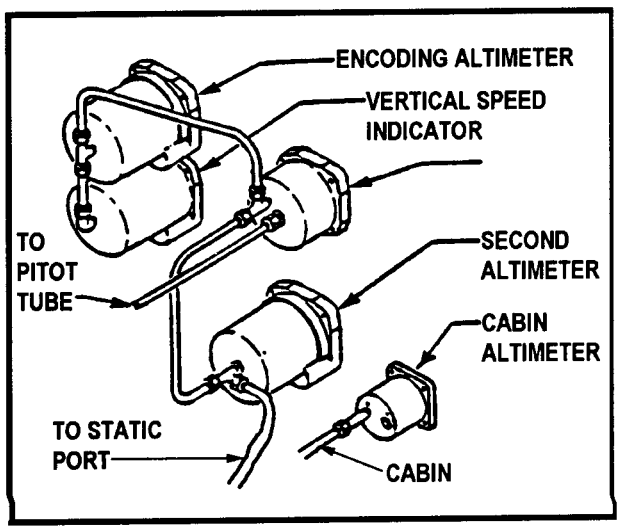

Figure 12-5. Pitot/static system for a small aircraft.

12-53. PITOT/STATIC TUBES AND LINES. The pitot tube (see figure 12-6) is installed at the leading edge of the wing of a single-engine aircraft, outside the propeller slipstream or on the fuselage of a multiengine aircraft with the axis parallel to the longitudinal axis of the aircraft, unless otherwise specified by the manufacturer.

12-54. STATIC PORTS AND VENTS (more modern trend) should be mounted flush with fuselage skin. One port is located on either side of the fuselage, usually behind the cabin.

Inspect for elevation or depression of the port or vent fitting. Such elevation or depression may cause airflow disturbances at high speeds and result in erroneous airspeed and altitude indications.

12-55. HEATER ELEMENTS. A heating element is located within the tube head to prevent the unit from becoming clogged during icing conditions experienced during flight. A switch in the cockpit controls the heater. Some pitot-static tubes have replaceable heater elements while others do not. Check the heater element or the entire tube for proper operation by noting either ammeter current or that the tube or port is hot to the touch. (See figure 12-6.)

12-56. SYSTEM INSPECTION.

a. Inspect air passages in the systems for water, paint, dirt or other foreign matter. If water or obstructive material has entered the system, all drains should be cleaned. Probe the drains in the pitot tube with a fine wire to remove dirt or other obstructions. The bottom static openings act as drains for the head's static chamber. Check these holes at regular intervals to preclude system malfunctioning.

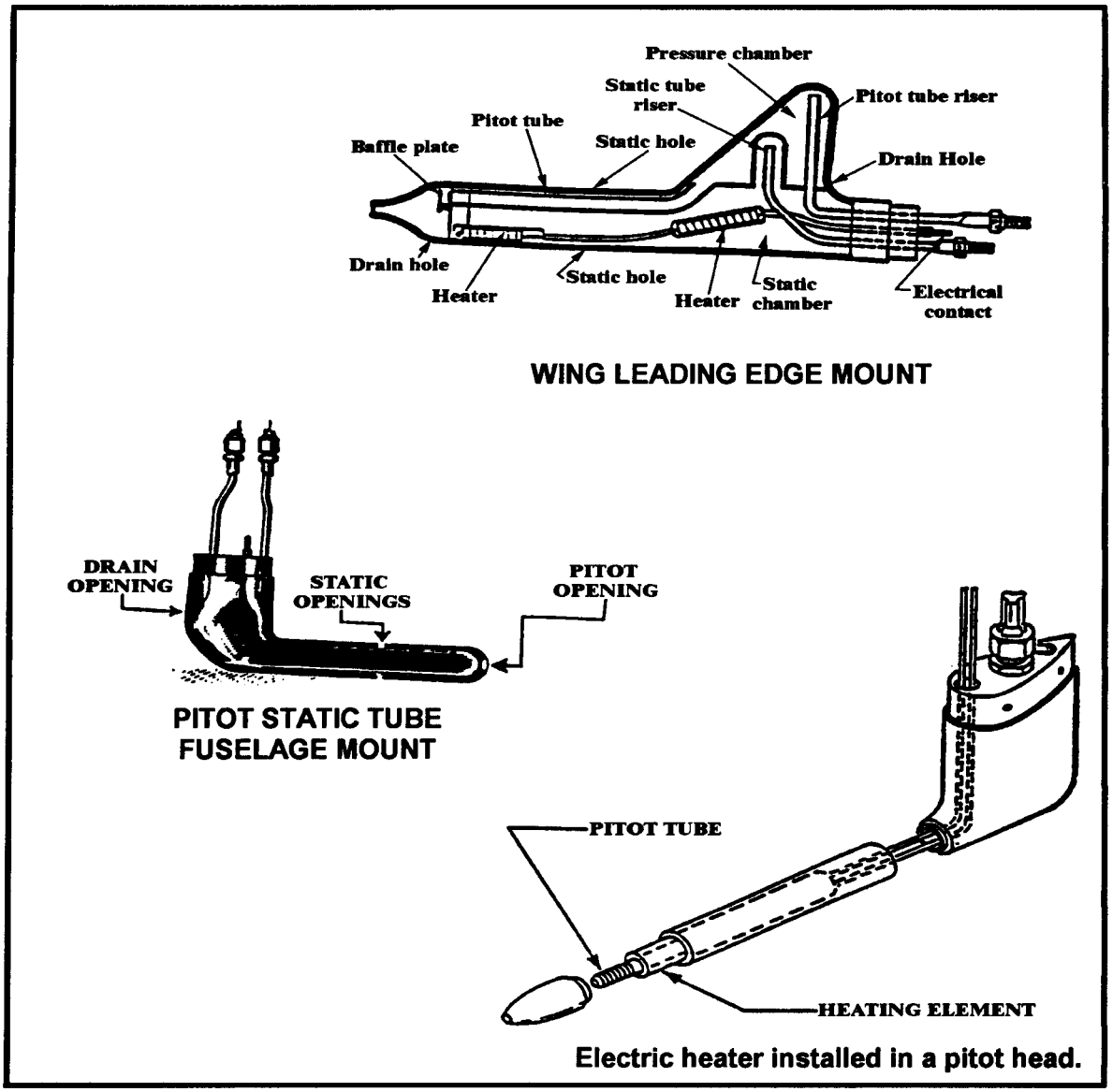

Figure 12-6. Pitot/Static Tube Head

b. Check to ensure the water drains freely. If a problem is experienced with the pitot-static system drainage or freezing at altitude, and the tubing diameter is less than 3/8-inch, replace it with larger tubing.

c. Check the pitot tube for corrosion.

(1) The pitot probe should not have any corrosion within ½-inch of the probe tip.

(2) Make sure there is no flaking which forms pits and irregularities in the surface of the tube.

NOTE: It is essential that the static air system be drained after the airplane has been exposed to rain.

12-57. SYSTEM LEAK TEST.

a. Pitot-static leak tests should be made with all instruments connected to assure that no leaks occur at instrument connections. Such tests should be accomplished whenever a connection has been loosened or an instrument replaced.

b. After the conclusion of the leak test, return the system to its normal flying configuration. Remove tape from static ports and pitot drain holes and replace the drain plug.

12-58. STATIC SYSTEM TESTS must comply with the static system tests required by 14 CFR 91.411 and be performed by an appropriately-rated repair station with the appropriate test equipment.

If the manufacturer has not issued instructions for testing static systems, the following may be used:

a. Connect the test equipment directly to the static ports, if practicable. Otherwise, connect to a static system drain or tee connection and seal off the static ports. If the test equipment is connected to the static system at any point other than the static port, it should be made at a point where the connection may be readily inspected for system integrity. Observe maintenance precautions given in paragraph 12-60 of this section.

b. Do not blow air through the line toward the instrument panel. This may seriously damage the instruments. Be sure to disconnect the instrument lines so no pressure can reach the instruments.

c. Apply a vacuum equivalent to 1,000 feet altitude, (differential pressure of approximately 1.07 inches of mercury or 14.5 inches of water) and hold.

d. After 1 minute, check to see that the leak has not exceeded the equivalent of 100 feet of altitude (decrease in differential pressure of approximately 0.0105 inches of mercury or 1.43 inches of water).

12-59. TEST PITOT SYSTEM in accordance with the aircraft manufacturer's instructions. If the manufacturer has not issued instructions for testing pitot systems, the following may be used:

a. Seal the drain holes and connect the pitot pressure openings to a tee to which a source of pressure and manometer or reliable indicator is connected.

b. Restrain hoses that can whip due to applied pressure.

c. Apply pressure to cause the airspeed indicator to indicate 150 knots (differential pressure 1.1 inches of mercury or 14.9 inches of water), hold at this point and clamp off the source of pressure. After 1 minute, the leakage should not exceed 10 knots (decrease in differential pressure of approximately 0.15 inches of mercury or 2.04 inches of water).

CAUTION: To avoid rupturing the diaphragm of the airspeed indicator, apply pressure slowly and do not build up excessive pressure in the line. Release pressure slowly to avoid damaging the airspeed indicator.

d. If the airspeed indicator reading declines, check the system for leaky hoses and loose connections.

e. Inspect the hoses for signs of deterioration, particularly at bends and at the connection points to the pitot mast and airspeed indicator. Replace hoses that are cracked or hardened with identical specification hoses. Any time a hose is replaced, perform a pressure check.

Warning: Do not apply suction to pitot lines.

12-60. MAINTENANCE PRECAUTIONS. Observe the following precautions in all pitot-static system leak testing:

a. Before any pitot/static system is tested, determine that the design limits of instruments attached to it will not be exceeded during the test. To determine this, locate and identify all instruments attached to the system.

b. A system diagram will help to determine the location of all instruments as well as locate a leak while observing instrument indications. If a diagram is not available, instruments can be located by tracing physical installation.

c. Be certain that no leaks exist in the test equipment.

d. Run full range tests only if you are thoroughly familiar with the aircraft instrument system and test equipment.

e. Make certain the pressure in the pitot system is always equal to, or greater than, that in the static system. A negative differential pressure across an airspeed indicator can damage the instrument.

f. The rate of change or the pressure applied should not exceed the design limits of any pitot or static instruments connected to the systems.

g. When lines are attached to or removed from the bulkhead feed-through fitting or at a union, ensure the line attached to the opposite end is not loose, twisted, or damaged by rotation of the fitting. Such fittings normally are provided with a hex flange for holding the fitting.

12-61. REPLACING LINES. If necessary to replace lines, observe the following installation:

a. Attach lines at regular intervals by means of suitable clamps.

b. Do not clamp lines at end fittings.

c. Maintain the slope of lines toward drains to ensure proper drainage.

d. Check the lines for leaks.

12-62. RELOCATON OF PITOT TUBE. If pitot tube relocation is necessary, perform the relocation in accordance with the manufacturer's recommendations and consider the following:

a. Freedom of aerodynamic disturbances caused by the aircraft.

b. Location protected from accidental damage.

c. Alignment with the longitudinal axis of the aircraft when in cruising flight.

12-63. TROUBLESHOOTING THE PITOT/STATIC PRESSURE SYSTEM.

a. If instruments are inoperative or erratic operation occurs, take the following action:

Table 12-1. Color codes for pitot-static systems.

CODE ABBR.	DEFINITION	COLOR
PP	PITOT PRESSURE	NATURAL
SP	STATIC PRESSURE (PILOT)	RED
	STATIC PRESSURE (CO-PILOT)	GREEN
	STATIC PRESSURE (CABIN)	YELLOW
	STATIC PRESSURE (STANDBY)	BLUE

(1) Check for clogged lines. Drain lines at the valves (especially after aircraft has been exposed to rain). Disconnect lines at the instruments and blow them out with low-pressure air.

(2) Check lines for leaks or looseness at all connections. Repair as required.

b. If the pitot heating element(s) are operative, check the following:

(1) Are circuit breaker(s) tripped?

(2) Reset the circuit breaker to determine if:

(a) The system is OK, or

(b) The circuit breaker trips again, if so:

1. Check the wiring continuity to the ground. If the switch(s) is defective, repair as necessary.

2. Check the heating element; replace it if it is defective.

12-64.—12-69. [RESERVED.]

SECTION 5. AVIONICS TEST EQUIPMENT

12-70 GENERAL. Certificated individuals who maintain airborne avionics equipment must have test equipment suitable to perform that maintenance.

12-71 TEST EQUIPMENT CALIBRATION STANDARDS.

a. The test equipment calibration standards must be derived from and traceable to one of the following:

(1) The National Institute of Standards and Technology.

(2) Standards established by the test equipment manufacturer.

(3) If foreign-manufactured test equipment, the standards of the country, where it was manufactured, if approved by the Administrator.

b. The technician must make sure that the test equipment used for such maintenance is the equipment called for by the manufacturer or equivalent.

(1) Before acceptance, a comparison should be made between the specifications of the test equipment recommended by the manufacturer and those proposed by the repair facility.

(2) The test equipment must be capable of performing all normal tests and checking all parameters of the equipment under test. The level of accuracy should be equal to or better than that recommended by the manufacturer.

(3) For a description of avionics test equipment used for troubleshooting, refer to the equipment or aircraft manufacturing instruction manual.

12-72 TEST EQUIPMENT CALIBRATION. Test equipment such as meters, torque wrenches, static, and transponder test equipment should be checked at least once a year.

c. National Institute of Standards and Technology traceability can be verified by reviewing test equipment calibration records for references to National Institute of Standards and Technology test report numbers. These numbers certify traceability of the equipment used in calibration.

d. If the repair station uses a standard for performing calibration, that calibration standard cannot be used to perform maintenance.

e. The calibration intervals for test equipment will vary with the type of equipment, environment, and use. The accepted industry practice for calibration intervals is usually one year. Considerations for acceptance of the intervals include the following:

(1) Manufacturer's recommendation for the type of equipment.

(2) Repair facility's past calibration history, as applicable.

f. If the manufacturer's manual does not describe a test procedure, the repair station must coordinate with the manufacturer to develop the necessary procedures, prior to any use of the equipment.

12-73 – 12-83. [RESERVED.]

CHAPTER 13. HUMAN FACTORS

13-1. HUMAN FACTORS INFLUENCE ON MECHANIC'S PERFORMANCE. To accomplish any task in aviation maintenance at least three things must be in evidence. A mechanic must have the tools, data, and technical skill to perform maintenance. Only recently has the aviation industry addressed the mechanic job functions, pressures, and stress, by identifying those human factors (HF) that impact the mechanics performance.

13-2. THE FAA AVIATION SAFETY PROGRAM has condensed these HF reports into a personal minimums checklist, which asks the mechanic to answer 10 'yes or no' questions before the maintenance task is begun and 10 'yes or no' questions after the task is completed. If the mechanic answers "NO" to any of the 20 questions, the aircraft should not be returned to service. We have provided the checklist in figure 13-1 for your evaluation and review. A color copy of the checklist is available from any Flight Standards District Office. Just ask for the Airworthiness Safety Program manager.

Airworthiness Aviation
Safety Program
Federal Aviation
Administration

MAINTENANCE

"PERSONAL MINIMUMS" CHECKLIST

√ Before the task

	DO I HAVE THE KNOWLEDGE TO PERFORM THE TASK?
	DO I HAVE THE TECHNICAL DATA TO PERFORM THE TASK?
	HAVE I PERFORMED THE TASK PREVIOUSLY?
	DO I HAVE THE PROPER TOOLS AND EQUIPMENT TO PERFORM THE TASK?
	HAVE I HAD THE PROPER TRAINING TO SUPPORT THE JOB TASK?
	AM I MENTALLY PREPARED TO PERFORM THE JOB TASK?
	AM I PHYSICALLY PREPARED TO PERFORM THE TASK?
	HAVE I TAKEN THE PROPER SAFETY PRECAUTIONS TO PERFORM THE TASK?
	DO I HAVE THE RESOURCES AVAILABLE TO PERFORM THE TASK?
	HAVE I RESEARCHED THE FAR'S TO ENSURE COMPLIANCE?

Airworthiness Aviation
Safety Program
Federal Aviation
Administration

√ After the task

	DID I PERFORM THE JOB TASK TO THE BEST OF MY ABILITIES?
	WAS THE JOB TASK PERFORMED TO BE EQUAL TO THE ORIGINAL?
	WAS THE JOB TASK PERFORMED IN ACCORDANCE WITH APPROPRIATE DATA?
	DID I USE ALL THE METHODS, TECHNIQUES, AND PRACTICES ACCEPTABLE TO INDUSTRY?
	DID I PERFORM THE JOB TASK WITHOUT PRESSURES, STRESS, AND DISTRACTIONS?
	DID I REINSPECT MY WORK OR HAVE SOMEONE INSPECT MY WORK BEFORE RETURNING TO SERVICE?
	DID I MAKE THE PROPER RECORD ENTRIES FOR THE WORK PERFORMED?
	DID I PERFORM THE OPERATIONAL CHECKS AFTER THE WORK WAS COMPLETED?
	AM I WILLING TO SIGN ON THE BOTTOM LINE FOR THE WORK PERFORMED?
	AM I WILLING TO FLY IN THE AIRCRAFT ONCE IT IS APPROVED FOR THE RETURN TO SERVICE?

FIGURE 13-1. Personal Minimum's Checklist

APPENDIX 1. GLOSSARY

The following words and terms represent some of those that are often encountered in the field of aviation. For a more complete list of definitions, a mechanic or technician should consult an aviation dictionary.

abrasion resistant PTFE—a solid insulation wall of PTFE with hard, nonconductive grit positioned midway in the wall thickness, and significantly improves the resistance of the PTFE material to damage from wear.

acetylene—gas composed of two parts of carbon and two parts of hydrogen. When burned in the atmosphere of oxygen, it produces one of the highest flame temperatures obtainable.

acetylene regulator—manually adjustable device used to reduce cylinder pressure to torch pressure and to keep the pressure constant. They are never to be used as oxygen regulators.

adherend—one of the members being bonded together by adhesive.

Airworthiness Directive—a regulation issued by the FAA that applies to aircraft, aircraft engines, propellers, or appliances, when an unsafe condition exists and that condition is likely to exist or develop in other products of the same type design.

airworthy—is when an aircraft or one of its component parts meets its type design and is in a condition for safe operation.

ambient light—the visible light level measured at the surface of the part.

ampere (A)—the basic unit of current flow. One A is the amount of current that flows when a difference of potential of 1 V is applied to a circuit with a resistance of 1 Ω. One coulomb per second.

antenna—a device designed to radiate or intercept electromagnetic waves.

anti-tear strips—strips of fabric of the same material as the airplane is covered with, laid over the wing rib under the reinforcing tape.

apparent power—the product of volts and amperes in AC circuits where the current and voltage are out of phase.

appliance—any instrument, mechanism, equipment, part, apparatus, appurtenance, or accessory, including communications equipment, that is used or intended to be used in operating or controlling an aircraft in flight, is installed in or attached to the aircraft, and is not part of an airframe, engine or propeller.

arm—a measurement of distance, in inches, feet, etc., used in weight and balance calculations. Normally only the longitudinal arm is of practical importance. The three axial arms are longitudinal arm, lateral arm, and vertical arm.

automatic direction finder (ADF)—a radio receiver utilizing a directional loop antenna that enables the receiver to indicate the direction from which a radio signal is being received; also called a radio compass.

automatic flight control system (AFCS)—a flight control system incorporating an automatic pilot with additional systems such as a VOR coupler, an ILS approach coupler, and an internal navigation system that is fully automatic, so the aircraft can be flown in a completely automatic mode.

avionics—the science and technology of electronics as applied to aviation.

azimuth—angular distance measured on a horizontal circle in a clockwise direction from either north or south.

balance—the condition of stability which exists in an aircraft when all weight and forces are acting in such a way as to prevent rotation about an axis or pivot point.

base metal—the metal to be welded, brazed, soldered, or cut.

black light—electromagnetic radiation in the near ultraviolet range of wavelength.

blade station—is a reference position on a blade that is a specified distance from the center of the hub.

bond—the adhesion of one surface to another, with or without the use of an adhesive as a bonding agent.

bonding—a general term applied to the process of electrically connecting two or more conductive objects. In aircraft, the purpose of bonding (except as applied to individual connections in the wiring and grounding systems) is to provide conductive paths for electric currents. This is accomplished by providing suitable low-impedance connections joining conductive aircraft components and the aircraft structure. Another purpose of bonding is to ensure the safe passage of current caused by lightning or static electricity through the aircraft structure.

borescope—a long, tubular optical instrument designed for remote visual inspection of surfaces.

brashness—a condition of wood characterized by low resistance to shock and by an abrupt failure across the grain without splintering.

braze welding—a welding process variation in which a filler metal, having a liquidus above 450 °C (840 °F) and below the solidus of the base metal is used. Unlike brazing, in braze welding the filler metal is not distributed in the joint by capillary action.

brazing—the joining of two pieces of metal by wetting their surface with molten alloy of copper, zinc, or tin.

bus or bus bar—solid copper strips to carry current between primary and secondary circuits; also used as jumpers.

butt joint—a joint between two members aligned approximately in the same plane.

butyrate dope—a finish for aircraft fabric consisting of a film base of cellulose fibers dissolved in solvents with the necessary plasticizers, solvent, and thinners.

cable—(electrical)—assembly of one or more conductors within an enveloping protective sheath so constructed as to permit use of conductors separately or in a group.

calibration—a set of operations, performed in accordance with a definite document procedure, which compares the measurements performed by an instrument or standard, for the purpose of detecting and reporting, or eliminating by adjustment, errors in the instrument tested.

center of gravity—that point about which the aircraft would balance if suspended. For field weight and balance purposes/control, the center of gravity is normally calculated only along its longitudinal axis (nose to tail), disregarding both the lateral and vertical location.

certification—implies that a certificate is in existence which certifies or states a qualification.

check—a lengthwise separation of the wood, the greater part of which occurs across the rings of annual growth.

chemical conversion coating (Specification MIL-C-81706)—is a chemical surface treatment used on aluminum alloys to inhibit corrosion and to provide a proper surface for paint finishing.

chord—an imaginary straight line joining the leading and trailing edges of an airfoil.

circuit—a closed path or mesh of closed paths usually including a source of EMF.

circuit breaker—a protective device for opening a circuit automatically when excessive current is flowing through it.

close-grained wood—wood with narrow and inconspicuous annual rings. The term is sometimes used to designate wood having small and closely-spaced pores, but in this sense the term "fine-textured" is more often used.

coil shot—production of longitudinal magnetization accomplished by passing current through a coil encircling the part being inspected.

compass—a device used to determine direction on the Earth's surface. A magnetic compass utilizes the Earth's magnetic field to establish direction.

compression wood—identified by its relatively wide annual rings, usually eccentric, and its relatively large amount of summer wood, usually more

than 50 percent of the width of the annual rings in which it occurs. Compression wood shrinks excessively lengthwise as compared with normal wood.

conductor—a wire or other material suitable for conducting electricity.

conduit—a rigid metallic or nonmetallic casing, or a flexible metallic casing covered with a woven braid or synthetic rubber used to encase electrical cables.

contact—electrical connectors in a switch, solenoid or relay that controls the flow of current.

control panel—an upright panel, open or closed, where switches, rheostats, meters, etc., are installed for the control and protection of electrical machinery.

corrosion—the electrochemical deterioration of a metal resulting from chemical reaction to the surrounding environment.

crack—is a partial separation of material caused by vibration, overloading, internal stresses, nicks, defective assemblies, fatigue, or rapid changes in temperature.

creepage—is the conducting of electrical current along a surface between two points at different potentials. The current's ability to pass between two points increases with higher voltage and when deposits of moisture or other conductive materials exist on the surfaces.

cross grain—grain not parallel with the axis of a piece. It may be either diagonal or spiral grain or a combination of the two.

cross coat—a double coat of dope or paint. It is sprayed on in one direction, and then immediately after the solvent flash-off, it is sprayed at right angles to the first coat.

cure—to change the properties of a thermosetting resin irreversibly by vulcanization or chemical reaction. May be accomplished by the addition of curing (cross-linking) agents, with or without a catalyst, and with or without heat or pressure.

curing temperature—temperature to which a resin or an assembly is subjected in order to cure the resin.

cutting torch—a device used in gas cutting of metals.

damping—limiting the duration of vibration by either electrical or mechanical means.

data—information that supports and/or describes the original aircraft design, alteration or repair including the following: (1) drawings, sketches, and or photographs; (2) engineering analysis; (3) engineering orders; and (4) operating limitations.

datum—imaginary vertical plane from which all horizontal measurements are made or indicated when the aircraft is in level flight attitude.

derating—is a technique whereby a part is stressed in actual usage at values well below the manufacturer's rating for the part. By decreasing mechanical, thermal, and electrical stresses, the probability of degradation or catastrophic failure is lessened.

direct current electrode negative—the arrangement of direct current arc welding leads in which the work is the positive pole and the electrode is the negative pole of the welding arc.

direct current electrode positive—the arrangement of direct current arc welding leads in which the work is the negative pole and the electrode is the positive pole of the welding arc.

discontinuity—an interruption in the normal physical structure or configuration of a part, such as a crack, lap, seam, inclusion, or porosity.

distal tip—the tip, lens end, of a borescope.

dope—liquid applied to fabric to tauten it by shrinking, strengthen it, and render it airtight by acting as a filler.

Dope-proofing—protecting a surface from the chemicals and chafing qualities of dope and doped fabrics.

drape—the ability of tape and broad goods to conform to a contoured shape.

drip loop—a bundle installation method used to prevent water or other fluid contaminants from running down the wiring into a connector.

dry rot—a term loosely applied to many types of wood decay but especially to that which, when in an advanced stage, permits the wood to be easily crushed to a dry powder. The term is actually a misnomer for any decay, since all fungi require considerable moisture for growth.

dwell time—the total time that a penetrant, emulsifier (or remover), or developer remains on the surface of the test part.

dye penetrant inspection—an inspection method for surface cracks in which a penetrating dye is allowed to enter any cracks present and is pulled out of the crack by an absorbent developer. A crack appears as a line on the surface of the developer.

edge grain—edge-grain lumber has been sawed parallel with the pith of the log and approximately at right angles to the growth rings; that is, the rings form an angle of 45 degrees or more with the surface of the piece.

electricity—one of the fundamental quantities in nature consisting of elementary particles, electrons and protons, which are manifested as a force of attraction or repulsion, and also in work that can be performed when electrons are caused to move; a material agency which, when in motion, exhibits magnetic, chemical, and thermal effects, and when at rest is accompanied by an interplay of forces between associated localities in which it is present.

electromagnet—temporary magnet which is magnetized by sending current through a coil of wire wound around an iron core.

Electromagnetic/Radio Frequency Interference (EMI/RFI)—frequency spectrum of electromagnetic radiation extending from subsonic frequency to X-rays. This term should not be used in place of the term Radio Frequency Interference (RFI). (See radio frequency interference.) Shielding materials for the entire EMI spectrum are not readily available.

electromotive force (EMF)—difference of electrical potential measured in volts.

electron—a negative charge that revolves around the nucleus of an atom; a unit of a negative electrical charge.

electronics—general term that describes the branch of electrical science and technology that treats the behavior and effects of electron emission and transmission.

electron Volt (eV)—a unit of energy equal to the energy aquired by an electron falling though potential differences of one volt, approximately 1.602X 10-19 joule.

emulsion-type cleaner—a chemical cleaner which mixes with water or petroleum solvent to form an emulsion (a mixture which will separate if allowed to stand). It is used to loosen dirt, soot, or oxide films from the surface of an aircraft.

epoxy—one of various usually thermosetting resins capable of forming tight cross-linked polymer structures marked by toughness, strong adhesion, high corrosion, and chemical resistance, used especially in adhesives and surface coating.

epoxy primer—a two-part catalyzed material used to provide a good bond between a surface and a surface coating.

epoxy resin—a common thermosetting resin which exhibits exceptionally good adhesion, low cure shrinkage, and low water-absorption properties.

erosion—loss of metal from metal surfaces by the action of small particles such as sand or water.

ETFE—(Frequently referred to by the trade name, *TEFZEL*) a copolymer of PTFE and polyethylene.

exciter—small generator for supplying direct current to the alternator's field windings.

exfoliation corrosion—a form of intergranular corrosion that attacks extruded metals along their layer-like grain structure.

expandable sleeving—open-weave braided sleeving used to protect wire and cables from abrasion and other hazards (commonly known by trade name *EXPANDO*).

FEP—fluorinated ethylene propylene (commonly known by the trade name, *TEFLON*). A melt extrudable fluorocarbon resin, very similar in appearance and performance to PTFE, but with a maximum temperature rating of 200 °C.

ferrous metal—iron, or any alloy containing iron.

fiberglass—the most common material used to reinforce structures in home-built and experimental aircraft. Available as mat, roving, fabric, etc. It is incorporated into both thermoset and thermoplastic resins. The glass fibers increase mechanical strength, impact resistance, stiffness, and dimensional stability of the matrix.

fill—threads in a fabric that run crosswise of the woven material.

filiform corrosion—a thread, or filament-like corrosion which forms on aluminum skins beneath the finish.

finish—external coating or covering of an aircraft or part.

flat grain—lumber has been sawed parallel with the pith of the log and approximately tangent to the growth rings; that is, the rings form an angle of less than 45 degrees with the surface of the piece.

fluorescent—a substance is said to be fluorescent when it will glow or fluoresce when excited by ultraviolet light. Some types of dye-penetrant material use fluorescent dyes which are pulled from the cracks by a developer and observed under "black" ultraviolet light.

flux—materials used to prevent, dissolve, or facilitate removal of oxides and other undesirable surface substances. Also, the name for magnetic fields.

fretting corrosion—corrosion damage between close-fitting parts which are allowed to rub together. The rubbing prevents the formation of protective oxide films and allows the metals to corrode.

fuse—a protective device containing a special wire that melts when current exceeds the rated value for a definite period.

functional check—this test may require the use of appropriate test equipment.

galvanic corrosion—corrosion due to the presence of dissimilar metals in contact with each other.

gas cylinder—a portable container used for transportation and storage of a compressed gas.

gas tungsten arc welding—(GTAW) an arc welding process which produces coalescence of metals by heating them with an arc between a tungsten (nonconsumable) electrode and the work. Shielding is obtained from a gas or gas mixture. Pressure may or may not be used and filler metal may or may not be used.

generator—a device for converting mechanical energy into electrical energy.

global positioning system (GPS)—a navigation system that employs satellite transmitted signals to determine the aircraft's location.

grain—the direction, size, arrangement, appearance, or quality of the fibers in wood or metal.

grain - diagonal—annual rings in wood at an angle with the axis of a piece as a result of sawing at an angle with the bark of the tree.

grommet—an insulating washer that protects the sides of holes through which wires must pass/or a metal or plastic drain attached to fabric on aircraft.

gross weight —the total weight of the aircraft including its contents.

grounding—the term is usually applied to a particular form of bonding that is the process of electrically connecting conductive objects to either conductive structure or some other conductive return path for the purpose of safely completing either a normal or fault circuit.

harness—a cable harness is a group of cables or wires securely tied as a unit.

honeycomb—manufactured product consisting of a resin-impregnated sheet or metal material which has been corrugated or expanded into hexagon-shaped and other structural-shaped cells. Primarily used as core material for sandwich constructions.

inductance (L)—the ability of a coil or conductor to oppose a change in current flow.

insulator—a material that will not conduct current to an appreciable degree.

integrated circuit—small, complete circuit built up by vacuum deposition and other techniques, usually on a silicon chip, and mounted in a suitable package.

intergranular corrosion—the formation of corrosion along the grain boundaries within a metal alloy.

interlocked-grained wood—wood in which the fibers are inclined in one direction in a number of rings of annual growth, then gradually reverse and are inclined in an opposite direction in succeeding growth rings, then reverse again.

inverter—a device for converting direct current to alternating current.

laminate—a product obtained by bonding two or more laminae of the same material or of different materials.

laminated wood—a piece of wood built up of plies or laminations that have been joined either with glue or with mechanical fastenings. The term is most frequently applied where the plies are too thick to be classified as veneer and when the grain of all plies is parallel.

leakage field—the magnetic field forced out into the air by the distortion of the field within a part, caused by the presence of a discontinuity or change in section configuration.

linter—the short fiber left on the cotton seed after ginning.

localizer—that section of an ILS that produces the directional reference beam.

LORAN (Long-Range Navigation)—a radio navigation system utilizing master and slave stations transmitting timed pulses. The time difference in reception of pulses from several stations establishes a hyperbolic line of position that may be identified on a LORAN chart. By utilizing signals from two pairs of stations, a fix in position is obtained.

magnetic field—the space around a source of magnetic flux in which the effects of magnetism can be determined.

marker beacon—a radio navigation aid used in an instrument approach to identify distance to the runway. As the aircraft crosses over the marker-beacon transmitter, the pilot receives an accurate indication of the airplane's distance from the runway through the medium of a flashing light and an aural signal.

master switch—a switch designed to control all electric power to all circuits in a system.

moisture content of wood—weight of the water contained in the wood usually expressed in percentage of the weight of the kiln-dry wood.

multiconductor cable—consists of two or more cables or wires, all of which are encased in an outer covering composed of synthetic rubber, fabric, or other material.

nick—a sharp notch-like displacement of metal surface.

nomex braid—*NOMEX* is the trade name for a high-temperature polyamide thread that is braided over the larger sizes (# 8 gage and larger) of many of the military specification wires. It can be encountered in either an off-white or black/green color.

normalizing—reforming of the grain structure of a metal or alloy by proper heat treatment to relieve internal stresses.

open circuit—an incomplete or broken electrical circuit.

open-grained wood—common classification of painters for woods with large pores, such as oak, ash, chestnut, and walnut. Also known as "coarse-textured."

operational check—this is an operational test to determine whether a system or component is functioning properly in all aspects in conformance with minimum acceptable manufacture design specifications.

optical fiber—any filament or fiber made of dielectric materials that guides light whether or not it is used to transmit signals.

rifice—opening through which gas or air flows. It is usually the final opening controlled by a valve.

oxidizing—combining oxygen with any other substance. For example, a metal is oxidized when the metal is burned, i.e., oxygen is combined with all the metal or parts of it

oxidizing flame—an oxy-fuel gas flame having an oxidizing effect due to excess oxygen.

oxygen cutting—cutting metal using the oxygen jet which is added to an oxygen-acetylene flame.

oxygen regulator—manually-adjustable device used to reduce cylinder pressure to torch pressure and to keep the pressure constant. They are never to be used as fuel gas regulators.

peel ply—a layer of resin-free material used to protect a laminate for later secondary bonding (sometimes referred to as a release film).

pickling—the treatment of a metal surface by an acid to remove surface corrosion.

pitch—is the distance, in inches, that a propeller section will move forward in one revolution, or the distance a nut will advance in one revolution of the screw in a single thread.

pitch distribution—is the gradual twist in the propeller blade from shank to tip.

pitted—small irregular shaped cavities in the surface of the parent material usually caused by corrosion, chipping, or heavy electrical discharge.

pitting—the formation of pockets of corrosion products on the surface of a metal.

plastic—an organic substance of large molecular weight which is solid in its finished state and, at some stage during its manufacture or its processing into a finished article, can be shaped by flow.

polyester braid—a plastic braiding thread, when used as the outer surface of a wire, provides a cloth-like appearance.

polyimide tape—a plastic film (commonly referred to by the trade name, *KAPTON*). The tape has a dark brown color, and is frequently coated with a polyimide varnish that has a very distinct mustard yellow color. At times, the spiral edge of the outermost tape is apparent under the varnish topcoat. It may be used for wire insulation. Total polyimide tape insulated wire constructions are inactive for new design on military aircraft and are subject to the procedures defined in FAA Advisory Circular AC 29-2A Change 2 Paragraph 29.1359 in Civil Aircraft.

polyimide varnish—a liquid form of polyimide that is applied to the outer surface of a wire through the process of repeated dipping through the varnish bath with subsequent heat curing. The successive layers rarely reach a total buildup of 1 mil.

polymerization—basic processes for making large (high-polymer) molecules from small ones, normally without chemical change; can be by addition, condensation, rearrangement, or other methods.

porosity—cavity-type discontinuities in metal formed by gas entrapment during solidification.

prepreg—a mat, a fabric, or covering impregnated with resin that is ready for lay up and curing.

propeller—is a rotating airfoil that consists of two or more blades attached to a central hub which is mounted on the engine crankshaft.

protractor—is a device for measuring angles.

PTFE Tape (Insulation)—polytetrafluoroethylene tape (commonly known by the trade name, *TEFLON*), wrapped around a conductor and then centered with heat, fusing the layers into a virtually homogeneous mass. It is used both as a primary insulation against the conductor, and as an outer layer or jacket over a shield. Maximum temperature rating is 260 °C.

PVF_2 Polyvinylidine Fluoride—a fluorocarbon plastic, that when used in aircraft wire, is invariably radiation cross-linked and employed as the outer layer.

radar (radio detecting and ranging)—radio equipment that utilizes reflected pulse signals to locate and determine the distance to any reflecting object within its range.

radome—a nonmetallic cover used to protect the antenna assembly of a radar system.

rectifier—a device for converting alternating current to direct current.

reinforcing tape—a narrow woven cotton or polyester tape used over aircraft fabric to reinforce it at the stitching attachments.

relay—an electrically-operated remote-control switch.

resin—vast profusion of natural and increasingly, synthetic materials used as adhesives, fillers, binders and for insulation.

resistance—the opposition a device or material offers to the flow or current.

resonance method (ringing) of ultrasonic inspection—a method of detecting material thickness or indications of internal damage by injecting variable frequency ultrasonic energy into a material. A specific frequency of energy will produce the clearest indication of damage in a given thickness of material. When the equipment is calibrated for a specific thickness, and this thickness changes, an aural or visual alert is given.

resonant frequency—the frequency of a source of vibration that is exactly the same as the natural vibration frequency of the structure.

resonate—a mechanical system is said to resonate when its natural vibration frequency is exactly the same as the frequency of the force applied. When an object resonates at a particular frequency, the amplitude in its vibration will increase immensely as that frequency is reached and will be less on either side of that frequency.

rib—part of primary structure, whose purpose is to maintain profile of airfoil and support fabric or thin wood covering.

sacrificial corrosion—a method of corrosion protection in which a surface is plated with a metal less noble than itself. Any corrosion will attack the plating rather than the base metal.

sandwich construction—a structural panel concept consisting in its simplest form of two relatively thin, parallel sheets (face sheets) of structural material bonded to and separated by a relatively thick, lightweight core. High strength-to-weight ratios are obtained with sandwiched materials.

scarf joint—a joint made by cutting away similar angular segments of two adherents and bonding the adherents with cut areas fitted together.

score—a surface tear or break on a surface that has a depth and length ranging between a scratch and a gouge.

scratch—a superficial small cut on a surface.

semiconductor device—any device based on either preferred conduction through a solid in one direction, as in rectifiers; or on a variation in conduction characteristics through a partially conductive material, as in a transistor.

severe wind and moisture problem (SWAMP) areas—areas such as wheel wells, wing folds, and near wing flaps, and areas directly exposed to extended weather conditions are considered SWAMP areas on aircraft.

silicone rubber—a high temperature (200 °C) plastic insulation that has a substantial silicone content.

soldering—a group of welding processes that produces coalescence of materials by heating them to the soldering temperature and by using a filler metal having a liquidus not exceeding 450 °C (840 °F) and below the solidus of the base metals. The filler metal is distributed between the closely-fitted surfaces of the joint by capillary action.

solenoid—a tubular coil for the production of a magnetic field; electromagnet with a core which is able to move in and out.

spar—main spanwise structural member(s) of an aircraft wing or rotorcraft rotor. A wing may have one or two made into a single strong box to which secondary leading and trailing structures are added.

spiral grain—a type of growth in wood which the fibers take a spiral course about the bole of a tree instead of the normal vertical course. The spiral may extend right-handed or left-handed around the tree trunk.

stator—the part of an AC generator or motor which contains the stationary winding.

stress corrosion—corrosion of the intergranular type that forms within metals subject to tensile

stresses which tend to separate the grain boundaries.

surface tape—pinked-edge strips of fabric doped over all seams, rib stitching, and edges of fabric covering (also called finishing tape).

switch—a device for opening or closing an electrical circuit.

tape—a tape or a "narrow fabric" is loosely defined as a material that ranges in width from 1/4 inch to 12 inches.

TCAS—traffic alert and collision avoidance system. An airborne system that interrogates mode A, C, and S transponders in nearby aircraft and uses the replies to identify and display potential and predicted collision threats.

thermocouple—device to convert heat energy into electrical energy.

thermoplastic material—a material that can be repeatedly softened by an increase in the temperature and hardened by a decrease in the temperature with no accompanying chemical change. For example, a puddle of tar on the road in the summer during the heat of day: the tar is soft and fluid; however, when cooler in the evening, it becomes solid again.

thermoset material—a material which becomes substantially infusible and insoluble when cured by the application of heat or by chemical means. A material that will undergo, or has undergone, a chemical reaction (different from a thermoplastics physical reaction) by the action of heat, catalysts, ultraviolet light, etc. Once the plastic becomes hard, additional heat will not change it back into a liquid as would be the case with a thermoplastic.

tip—part of the torch at the end where the gas burns, producing the high-temperature flame.

transceiver—a unit serving as both a receiver and a transmitter.

transformer—a device for raising or lowering AC voltage.

transmitter—an electronic system designed to produce modulated RF carrier waves to be radiated by an antenna; also, an electric device used to collect quantitative information at one point and send it to a remote indicator electrically.

transponder—an airborne receiver-transmitter designed to aid air traffic control personnel in tracking aircraft during flight.

unbonding—adhesive or cohesive failure between laminates. Compare definitions of adhesive, cohesive debond, and disbond.

very high frequency (VHF)—a frequency between 30 and 300 MHz

VHF omnirange (VOR)—an electronic air navigation system that provides accurate direction information in relation to a certain ground station.

videoscope—a type of borescope.

visible light—electromagnetic radiation that has a wavelength in the range from about 3,900 to 7,700 angstroms and that may be seen by the unaided human eye.

visual check—utilizing acceptable methods, techniques, and practices to determine physical condition and safety item.

volt—unit of potential, potential difference, or electrical pressure.

voltage regulator—device used in connection with generators to keep the voltage constant as load or speed is changed.

warp—threads in a fabric that run the length of the woven material as it comes from the mill.

watt—the unit of power; equal to a joule per second.

wattmeter—an instrument for measuring electrical power.

waveguide—a hollow, typically rectangular, metallic tube designed to carry electromagnetic energy at extremely high frequencies.

wavy-grained wood—wood in which the fibers collectively take the form of waves or undulations.

welding—a materials-joining process used in making welds.

welding rod—a form of welding filler metal, normally packaged in straight lengths.

welding torch—the device used in gas welding.

wood decay—disintegration of wood substance through the action of wood-destroying fungi.

wood decay - incipient—the early stage of decay in which the disintegration has not proceeded far enough to soften or otherwise perceptibly impair the hardness of the wood.

wood decay - typical or advanced—the stage of decay in which the disintegration is readily recognized because the wood has become punky, soft and spongy, stringy, pitted, or crumbly.

x-ray—a radiographic test method used to detect internal defects in a weld.

XL-ETFE—A process of radiation cross-linking the polymer chains is used to thermally set the plastic. This prevents the material from softening and melting at elevated temperature.

XL-Polyalkene—an insulation material based on the polyolefin family that has its normally thermomelt characteristic altered by the radiation cross-linking process to that of a nonmelt, therm-set material.

APPENDIX 2. ACRONYMS AND ABBREVIATIONS

The acronyms and abbreviations listed are some of many that are likely to be encountered by the aviation mechanic or technician involved in the maintenance of aircraft.

429—ARINC 429 data bus standard
629—ARINC 629 data bus standard
A/D—analog/digital; analog-to -digital
A/D CONV—analog-to -digital converter
A/L—autoland
AC—Advisory Circular
ac—alternating current
ACARS—ARINC Communication Addressing and Reporting System
ACO—Aircraft Certification Office
AD—Airworthiness Directive
ADC—air-data computer
ADCP—ATC dual-control panel
ADEDS—advanced electronic display system
ADF—automatic direction finder
ADI—attitude-director indicator; air data instrument
AFC—automatic frequency control
AFCS—automatic flight control system
AFDS—autopilot flight director system
AIM—Aeronautical Information Manual
AIRCOM—air/ground communications
AM—amplitude modulation
AMP or **AMPL**—amplifier
AMP—amperes
AMS—Aerospace Material Specification
AN—Army/Navy
AND—Army Navy Design
ANSI—American National Standards Institute
ANT—antenna
AP—autopilot
APB—auxiliary power breaker
APCU—auxiliary power control unit
APU—auxiliary power unit
ARINC—Aeronautical Radio Incorporated
ARNC IO—ARINC I/O error
ARNC STP—ARINC I/O UART data strip error
ASTM—American Society for Testing Materials
ATA—Air Transport Association
ATC—air traffic control
ATCT—ATC transponder
ATCTS—ATC transponder system
AUX—auxiliary
AVC—automatic volume control
AWG—American Wire Gauge
AWS—Air Weather Service
B/CU—battery/charger unit
BAT or **BATT**—battery
BCD—binary-coded decimal
BIT—binary digit; built-in test
BITE—built-in test equipment
BITS—bus interconnect transfer switch
BNR—binary numerical reference; binary
BP—band-pass
BPCU—bus power control unit
BT—bus tie
BTB—bus tie breaker
BTC—before top center
BUS—electrical bus; 429 digital data bus
C.G.—Center of Gravity
CAC—caution advisory computer
CAGE—commercial and government entity code
CAWS—central aural warning system; caution and warning system
CB, C/B, or **CKT/BKR**—circuit breaker
CDI—course-deviation indicator
CDU—central display unit
CFC—carbon fiber composite
CFDIU—centralized fault display interface unit
CFDS—centralized fault display system
CH or **CHAN**—channel
CHGR—charger
CKT—circuit
CLK—clock
CLR—clear
CMCS—central maintenance computer system
CMPTR—computer
CO—carbon monoxide
COAX—coaxial
COP—copper
CP—control panel
CRT—cathode-ray tube; circuit
CSE or **CSEU** —control system electronics unit
CSEUP—control system electronics unit panel
CT—computed tomography
CT—current transformer
CTN—caution
CU—control unit; copper
CVR—cockpit voice recorder
CW—continuous wave
D/A—digital-to-analog
DAC—digital-to analog converter
DADC—digital air-data computer
DBT—dead bus tie
dc—direct current

DCDR—decoder
DDB—digital data bus
DEMOD—demodulator
DEMUX—demultiplexer
DFDR—digital flight data recorder
DG—directional gyro
DGTL—digital
DH—decision height
DISC SOL—disconnect solenoid
DISC—disconnect
DISTR—distribution
DMA—direct memory access
DMB—dead main bus
DMC—display management computer
DME—distance-measuring equipment
DMEA—distance-measuring equipment antenna
DN—down
DU—display unit
E/E—or E & E electrical/electronic
E1-1—first shelf, number 1 equipment rack
E2-2—second shelf, number 2 equipment rack
EADF—electronic automatic direction finder
EADI—electronic attitude-director indicator
EAROM—electrically alterable read-only memory
EC—EICAS computer
ECAM—electronic centralized aircraft monitoring
EDSP—EICAS display select panel
EDU—EICAS display unit
EEC—electronic engine control
EFI—electronic flight instrument
EFIS—electronic flight instrument system
EFISCP—EFIS control panel
EFISCU—EFIS comparator unit
EFISG EFIS—symbol generator
EFISRLS EFIS—remote light sensor
EHSI—electronic horizontal-situation indicator
EHSID—electronic horizontal-situation indicator display
EHSV—electrohydraulic servo value
EICAS—engine indicating and crew alerting system
ELCU—electrical load control unit
ELEC—electric; electronic
ELECT—electrical
ELEX—electronics; electrical
ELT—Emergency Locator Transmitter
EMER GEN—emergency generator
emf—electromotive force
EMFI—electromechanical flight instrument
EMI—Electromagnetic interference
EP AVAIL—external power available
EP—external power
EPC—external power contactor
EPCS—electronic power control switch
EPROM—erasable programmable read-only memory
eV—electron volt
EXCTR—exciter
EXT PWR—external power
FAA—Federal Aviation Administration
FAA-PMA—Federal Aviation Administration Parts Manufacturer Approval
FM—frequency modulation
FM/CW—frequency modulation continuous wave
FMC—flight management computer
FMCD—flight management computer control display unit
FMCS—flight management computer system
FMS—flight management system
FOD—foreign object damage
FREQ—frequency
FSEU—flap/slat electronic unit
FW or FWD—forward
G/S—glide slope
GAL or GALY—galley
GCR—generator control relay auxiliary contact
GCU—generator control unit
GEB—generator circuit breaker
GEN—generator
GLR—galley load relay
GMAW—gas metal arc welding
GMT—Greenwich mean time; cordinated Universal time
GND PWR—ground power
GND RET—ground return
GND SVCE—ground service
GND or **GRD**—ground
GPCU—ground power control unit
GPS—global positioning system
GPSW—gear opposition switch
GPU—ground power unit
GPW—ground proximity warning
GPWS—ground proximity warning system
GSR—ground service relay
GSSR—ground service select relay
GSTR—ground service transfer relay
GTAW—gas tungsten arc welding
GWPC—ground proximity warning computer
H/L—high/low
HEA—high-frequency radio antenna
HF (hf) —high frequency (3 to 30 MHz)
HFCP—high-frequency radio control panel

*U.S. Government Printing Office: 2001 — 491-885/54460