US Department
of Transportation

**Federal Aviation Administration**

# Advisory Circular

REPRINT INCORPORATES CHANGE 1

**Subject: SPECIFICATION FOR AIRPORT LIGHT BASES, TRANSFORMER HOUSINGS, JUNCTION BOXES, AND ACCESSORIES**

**Date: 6/8/89**
**Initiated by: AAS-200**

**AC No: 150/5345-42C**
**Change:**

**1. PURPOSE.** This advisory circular (AC) contains the specifications for containers designed to serve as airport light bases, transformer housings, junction boxes, and related accessories.

**2. PRINCIPAL CHANGES.** The principal changes include:

**a.** Establishment of specifications, requirements, and testing for Type L-868, Class II, field fabricated containers.

**b.** Redefinition of prototype and production testing procedures for all types, classes, and categories of containers.

**c.** Revision of all drawings for clarity and addition of metric units.

**3. CANCELLATION.** Advisory Circular 150/5345-42B, Specification For Airport Light Base and Transformer Housings, Junction Boxes, and Accessories, dated 9/21/81, is canceled.

**4. METRIC UNITS.** To promote an orderly transition to metric units, the specification includes both English and metric dimensions. The metric conversions may not be exact equivalents and, until there is an official changeover to the metric system, the English units will govern.

Leonard E. Mudd

**Leonard E. Mudd**
Director, Office of Airport Safety and Standards

# CONTENTS


1. SCOPE ..... 1
   1.1 Type ..... 1
   1.2 Class.. ..... 1
   1.3 Size ..... 1

2. APPLICABLE DOCUMENTS ..... 1
   2.1 FAA Advisory Circulars.. ..... 1
   2.2 Federal Specifications.. ..... 1
   2.3 Military Standards aud Specifications ..... 2
   2.4 American Society for Testing and Materials ..... 2
   2.5 American National Standards Institute ..... 2

3. REQUIREMENTS ..... 3
   3.1 General Description and Intended Use ..... 3
      3.1.1 Type L-867 Containers ..... 3
      3.1.2 Type L-868 Containers ..... 3
      3.1.3 Type L-869 Containers ..... 3
      3.1.4 Accessories ..... 3
   3.2 Fabrication and Materials ..... 4
      3.2.1 Type L-867, Class I ..... 4
      3.2.2 Type L-867, Class II ..... 4
      3.2.3 Accessories.. ..... 5
      3.2.4 Type L-868, Class I. ..... 5
      3.2.5 Type L-868, Class II. ..... 6
      3.2.6 Accessories ..... 7
      3.2.7 Type L-869 ..... 7
      3.2.8 Ground Lug ..... 7
      3.2.9 Drains ..... 7
      3.2.10 Protective Coating ..... 7

4. QUALITY ASSURANCE PROVISIONS ..... 8
   4.1 Prototype Testing ..... 8
      4.1.1 Type L-867, Class I ..... 8
      41.2 Type L-867, Class II.. ..... 9
      4.1.3 Type L-868, Class I ..... 9
      4.1.4 Type L-868, Class II ..... 9
      4.1.5 Type L-869.. ..... 11
   4.2 Production Testing ..... 11
      4.2.1 Lot Size.. ..... 11
      42.2 Sample Size and Acceptance Criteria ..... 11
      4.2.3 Retesting ..... 11
      4.2.4 Type L-867, Class I. ..... 11
      4.2.5 Type L-868, Class II ..... 11
      4.2.6 Type L-868, Class I ..... 11
      4.2.7 Type L-868, Class II. ..... 12
      4.2.8 Type L-869.. ..... 12
   4.3 Certification ..... 12
   4.4 Guarantee.. ..... 12

5. PREPARATION FOR DELIVERY ..... 13
5.1 Packing ..... 13
5.2 Marking ..... 13

## FIGURES

Figure 1. Flange, Type L-867, Class I ..... 14
Figure 2. Body, Type L-867, Class I ..... 15
Figure 3. Extensions, Type L-867, Class I ..... 17
Figure 4. Adjustable, Type L-867, Class I ..... 18
Figure 5. Flange, Type L-867, Class II ..... 19
Figure 6. Body, Type L-867, Class II ..... 20
Figure 7. Extensions, Type L-867, Class II ..... 21
Figure 8. Adjustable, Type L-867, Class II ..... 22
Figure 9. Accessories, Type L-867 ..... 23
Figure 10. Flange, Type L-868, Class I ..... 24
Figure 11. Body, Type L-868, Class I ..... 25
Figure 12. Extensions, Type L-868, Class I ..... 27
Figure 13. Flange, Type L-868, Class II ..... 28
Figure 14. Body, Type L-868, Class II ..... 29
Figure 15. Extensions, Type L-868, Class II ..... 30
Figure 16. Accessories, Type L-868.. ..... 31
Figure 17. Flange, Type L-869.. ..... 32
Figure 18. Body, Type L-869 ..... 33
Figure 19. Extensions, Type L-869 ..... 34

# SPECIFICATION FOR AIRPORT LIGHT BASES, TRANSFORMER HOUSINGS, JUNCTION BOXES, AND ACCESSORIES

**1. SCOPE.** This specification sets forth the requirements for the following items: containers to serve as light bases, transformer housings, and junction boxes; and related accessories. This specification covers several types, classes, and sizes of containers.

**1.1 Type.** The type designation of the containers distinguishes their application as follows:

| | |
|---|---|
| Type L-867 | Containers for applications subject to occasional light vehicular loading but no aircraft or other heavy vehicular loading. |
| Type L-868 | Containers for applications subject to aircraft and other heavy vehicular loading. |
| Type L-869 | Containers used as junction boxes for applications subject to aircraft and other heavy vehicular loads. |

**1.2 Class.** The class designation applies as follows:

| | |
|---|---|
| Class I | Containers that are fabricated from steel in exact conformance to the dimensions and requirements specified herein. |
| Class II | Containers that are fabricated from materials other than those specified for Class I containers. |

**1.3 Size.** Five container size designations are assigned. The size refers to the nominal diameter of the container. Sizes and applicable types are as follow:

| **Size** | **Type** |
|---|---|
| Size A - 10 inch (254 mm) | Type L-868 |
| Size B - 12 inch (305 mm) | Type L-867 and Type L-868 |
| Size C - 15 inch (381 mm) | Type L-868 |
| Size D - 16 inch (406 mm) | Type L-867 |
| Size E - 24 inch (610 mm) | Type L-867 |

**2. APPLICABLE DOCUMENTS.** The following documents have been referenced in this specification or complement the information presented in this specification.

**2.1 FAA Advisory Circulars.** The following FAA advisory circulars contain information pertinent to this specification. Copies of the current edition of these advisory circulars may be obtained at no charge from the Department of Transportation, Utilization and Storage Section, M-443.2, Washington, DC 20590.

| | |
|---|---|
| AC 150/5340-4 | Installation Details for Runway Centerline and Touchdown Zone Lighting Systems |
| AC 150/5345-46 | Specification for Runway and Taxiway Light Fixtures |
| AC 150/5340-19 | Taxiway Centerline Lighting System |

**2.2 Federal Specifications.** The following Federal specifications in effect on the date of application for qualification form a part of this specification and are applicable to the extent specified herein. Copies of Federal specifications may be obtained from: General Services Administration Offices in Washington, DC;

Seattle, WA; San Francisco, CA; Denver, CO; Kansas City, MO; Chicago, IL; Atlanta, GA; New York, NY; Boston, MA; Dallas, TX; and Los Angeles, CA.

| | |
|---|---|
| QQ-P-416 | Plating, Cadmium (Electrodeposited) |
| QQ-Z-325 | Zinc Coating, Electrodeposit Requirements for |
| ZZ-R-765 | Rubber, Silicone, Low and High Temperature and Tear Resistant |

**2.3 Military Standards and Specification.** The following military standards and specification in effect on the date of application for qualification form a part of this specification and are applicable to the extent specified herein. Copies of military standards and specifications may be obtained from: Commanding Officer, ATTN: Code 1052, Naval Publications and Forms Center, 5801 Tabor Avenue, Philadelphia, PA 19120.

**2.3.1 Military Standards.**

| | |
|---|---|
| MIL-STD-105 | Sampling Procedures and Tables for Inspection by Attributes |
| MIL-STD-810 | Environmental Test Methods |

**2.3.2 Military Specification.**

| | |
|---|---|
| MIL-P-26915 | (USAF) Primer Coating, Zinc Dust Pigmented, for Steel Surfaces |

**2.4 American Society for Testing and Materials (ASTM) Specifications, Test Methods, Standard Practices, and Recommended Practices.** The following specifications, test methods, standard practices, and recommended practices in effect on the date of application for qualification form a part of this specification and are applicable to the extent specified herein. Copies of ASTM specifications, test methods, and recommended practices may be obtained from: American Society for Testing and Materials, 1916 Race Street, Philadelphia, PA 19103.

| | |
|---|---|
| A 36 | Standard Specification for Structural Steel |
| A 153 | Standard Specification for Zinc Coating (Hot-Dip) on Iron and Steel Hardware |
| A 385 | Standard Recommended Practice for Providing High Quality Zinc Coatings (Hot-Dip) |
| A 386 | Standard Specification for Zinc Coating (Hot-Dip) on Assembled Steel Products |
| c 109 | Test Method for Compressive Strength of Hydraulic Cement Mortars |
| C 617 | Standard Practice for Capping Cylindrical Concrete Specimens |
| C 827 | Early Volume Change of Cementitious Mixtures |
| D 2240 | Standard Test Method for Rubber Property–Durometer Hardness |

**2.5 American National Standards Institute (ANSI).** The following standard in effect on the date of application for qualification forms a part of this specification and is applicable to the extent specified herein. Copies of ANSI standards may be obtained from the National Standards Institute, 1430 Broadway, New York, NY 10018.

| | |
|---|---|
| B46.1 | Surface Texture |

## 3. REQUIREMENTS.

### 3.1 General Description and Intended Use.

**3.1.1 Type L-867 Containers.** Type L-867 containers are used as mounting bases for airport lights, as transformer housings and as electrical junction boxes. Type L-867 containers shall be designed to withstand occasional light vehicular loads. They are subject to direct earth burial with and without concrete backfill.

**3.1.2 Type L-868 Containers.** Type L-868 containers are used as mounting bases for in-pavement airport lights, as housings for isolation transformers, and as electrical junction boxes. They shall be designed to withstand aircraft and other heavy vehicular loadings.

**3.1.3 Type L-869 Containers.** Type L-869 containers are used as junction boxes to house electrical connections of in-pavement lights not housed in Type L-868 containers. They are subject to embedment in airport pavements and shall be designed to withstand aircraft and other heavy vehicular loadings.

**3.1.4 Accessories.** Accessories are used to make corrections, and adjustments to containers, and to facilitate construction of airport lighting systems.

**3.1.4.1 Spacer Rings.** Spacer rings are installed between the container flange ring and the light fixture or other accessory. Spacer rings may be grooved or ungrooved, as specified. Several different kinds of spacer rings are used as described below.

**3.1.4.1.1 Flat.** Flat spacer rings are used to provide height adjustment for Type L-867 or L-868 containers.

**3.1.4.1.2 Grooved.** Grooved spacer rings, with “O” ring gaskets, are used to provide a better watertight seal with an in-pavement light.

**3.1.4.1.3 Tapered.** Tapered spacer rings are used to provide level and/or height correction for out-of-level Type L-868 containers.

**3.1.4.1.4 Azimuth Correction Ring.** Azimuth correction spacer rings are used to correct the alignment of light fixtures attached to misaligned containers.

**3.1.4.2 Conduit Connections.** Conduit connections permit connection of underground conduit to the containers. Conduit connections (number, type, size, and location) are to be provided as specified.

**3.1.4.3 Conversion Rings.** Conversion rings are used to change the bolt circle of a Type L-867 container to that of a Type L-868 container or vice versa.

**3.1.4.4 Extensions.** Extensions are used to provide height adjustments that are too large to be accomplished with spacer rings.

**3.1.4.5 Plates and Covers.** Various plates and covers are necessary for the reasons as described below.

**3.1.4.5.1 Cover Plates.** Cover plates are used to provide a cover for containers used without light fixtures.

**3.1.4.5.2 Mud Plates.** Mud plates are used in conjunction with plywood covers on Type L-868 containers to protect the container flange during construction and to facilitate locating the container after construction.

**3.1.4.5.3 Plywood Covers.** Plywood covers are used to protect containers during shipping and installation.

**3.1.4.6 Optional Items.** Several optional items are available to satisfy different conditions.

**3.1.4.6.1 Adjustable Height Containers.** Type L-867 containers with provisions for height adjustment may be specified to meet local conditions.

**3.1.4.6.2 Grounding Lugs.** When grounding of the containers is required, grounding lugs shall be provided on the container. They may be located internally or externally as specified.

**3.1.4.6.3 Drains.** Drains shall be provided as specified to prevent the accumulation of water in the bases and conduit.

**3.1.4.6.4 "O" Ring Gaskets.** "O" ring gaskets are used with grooved spacer rings, plates, and covers to provide a better watertight connection.

**3.2 Fabrication and Materials.** Containers and related accessories designed to function as light bases, transformer housings, and junction boxes shall be fabricated of suitable material to meet the following standards.

**3.2.1 Type L-867 Containers and Extensions, Class I.** Type L-867 containers and extensions. Class I shall be fabricated from steel conforming to ASTM A 36 using fabrication techniques that will produce units meeting the appropriate testing requirements of paragraphs 4.1 and 4.2.

**3.2.1.1 Flange.** The dimensions of the flange shall be as shown in Figure 1. The flat surface of the flange shall be installed at an angle of 90 plus or minus 0.25 degrees to the axis of the cylindrical body. The flange shall be continuously attached to the body to provide a watertight seal.

**3.2.1.2 Body.** The body, including the sides and bottom shall be fabricated from one or more pieces. The dimensions of the body shall be as shown in Figure 2. Two conduit connections or grommets shall be provided and installed near the bottom of the base. The location and size, as shown in Figure 2, shall be considered standard. However, the location, number, type, and size can be altered to meet project requirements. Any sharp edges formed on the inside of the body shall be removed to prevent cutting or chafing of the cable insulation. The length of the body section as shown in Figure 2 shall be considered standard, but the length may be varied to meet special conditions.

**3.2.1.3 Extensions.** The dimensions of the extensions and spacer rings shall be as shown in Figure 3. Extensions for L-867 containers shall be ordered to length with a minimum length of 1-3/4 inches (44.5 mm) and a tolerance of plus or minus l/16 inch (1.5 mm). Flat spacer rings are utilized for height adjustments from l/16 inch (1.5 mm) through l-11/16 inches (42.86 mm) in l/16 inch (1.5 mm) increments.

**3.2.1.4 Adjustable Height Type L-867, Class I, Containers.** Adjustable height Type L-867, Class I, containers shall be fabricated in two parts. The body shall be identical to the body of the standard container. The flange shall be designed to fit over the top of the body and shall contain three screws that will contact the body sidewalls. The flange is held in position by tightening the screws against the body sidewalls. These containers shall be dimensioned as shown in Figure 4. Alternatively, adjustable height containers may be fabricated with telescoping sidewalls to allow height adjustment. In this instance, internal set screws are used to hold the top of the container in position.

**3.2.1.5 Bolts.** Bolts suitable for use in threaded holes as shown in Figures 1, 3, and 4 shall be supplied with each container and extension assembly. The bolts shall conform to the dimensions specified in the notes in Figures 1, 3, and 4 and shall be fabricated from 18-8 stainless steel.

**3.2.2 Type L-867 Containers and Extensions, Class II.** Type L-867 containers and extensions, Class II, shall be fabricated from suitable materials and dimensioned so as to produce units meeting the appropriate testing requirements of paragraphs 4.1 and 4.2.

**3.2.2.1 Flange.** The flange shall be fabricated from suitable materials meeting the following critical dimensions: bolt circle pattern and diameter (Figure 5, dia B); inner diameter of flange (Figure 5, dia C); bolt hole diameter and threading (Figure 5); and angle of the flat surface of the flange to the axis of the body (paragraph 3.2.1.1). Flange thickness and material shall be sufficient to pass the load test specified in paragraph 4.1.2.1. The flange shall be continuously attached to the body to provide a watertight seal.

**3.2.2.2 Body.** The body, sides, and bottom may be fabricated from one or more pieces. The sides and bottom shall be fabricated from suitable materials sufficient to pass the load test described in paragraph 4.1.2.1. Two conduit connections or grommets shall be installed near the bottom of the base. The location and size, as shown in Figure 6, shall be considered standard. However, the location, number, type, and size can be altered to meet project requirements. Any sharp edges formed on the inside of the body shall be removed to prevent cutting or chafing of the cable insulation. The length of the body section as

shown in Figure 6 shall be considered standard, but the length may be varied to meet special conditions.

**3.2.2.3 Extensions.** The dimensions of the extensions and spacer rings shall be as shown in Figure 7. Extensions shall be fabricated of the same materials and dimensions specified in paragraph 3.2.2.1 and 3.2.2.2 above. Extensions shall be ordered to length with a minimum length of l-3/4 inches (44.5 mm) and a tolerance of plus or minus l/16 inch (1.5 mm). Flat spacer rings are utilized for height adjustments from l/16 inch (1.5 mm) through l-11/16 inches (42.86 mm) in l/16 inch (1.5 mm) increments.

**3.2.2.4 Adjustable Height Type L-867, Class II Containers.** Adjustable height Type L-867, Class II containers shall be fabricated in two parts. The body shall be identical to the body of the standard container. The flange shall be designed to fit over the top of the body and shall contain three screws that will contact the body sidewalls. The flange is held in position by tightening the screws against the body sidewalls. These containers shall be dimensioned as shown in Figure 8.

**3.2.2.5 Bolts.** Bolts suitable for use in threaded holes as shown in Figures 5, 7, and 8 shall be supplied with each container and extension assembly. The bolts shall conform to the dimensions specified in the notes in Figures 5, 7, and 8 and shall be fabricated from 18-8 stainless steel.

**3.2.3 Accessories.** Various accessories are necessary to facilitate construction involving Type L-867 containers or to make corrections or adjustments to Type L-867 containers. These accessories are detailed in Figure 9.

**3.2.4 Type L-868, Class I, Containers and Extensions.** Type L-868 containers and extensions, Class I, shall be fabricated from steel conforming to ASTM A 36 and constructed in such a manner as to meet the appropriate testing requirements given in paragraphs 4.1 and 4.2.

**3.2.4.1 Flange.** The dimensions of the flange shall be as shown in Figure 10. The flat surface of the flange shall be installed at an angle of 90 degrees, plus or minus 0.125 degrees, to the axis of the cylindrical body of the container. The flange shall be continuously attached to the body to provide a watertight seal. The flange face, outside and inside diameter, shall be finished in accordance with ANSI B 46.1.

**3.2.4.2 Body.** The body section, sides and bottom, may be formed from one or more pieces. One piece body sections shall have an anchor ring (mid-ring) attached to the body by a continuous weld applied to the upperside and lowerside of the ring as shown in Figure 11. The length of the one piece body section shown in Figure 11 shall be considered a standard, but the overall length may vary to meet specific conditions. Two 2-inch (51 mm) conduit connections or grommets shall be provided near the bottom of the body. The location, number, and size of conduit connections or grommets shown in Figure 11 shall be considered standard, but the size, location, and number of connections or grommets can be varied to meet specific conditions. Any sharp edges at the conduit entrances shall be removed to prevent cutting or chafing of the cable insulation. When sectional containers are specified, the sections shall be dimensioned as shown in Figure 11.

**3.2.4.3 Extensions.** Extensions shall be fabricated from steel conforming to ASTM A 36. The dimensions of extensions shall be as shown in Figure 12. The minimum extension length shall be 2 inches (51 mm). If specified, the top flange of the extension shall contain an "O" ring groove as shown in Figure 12. Flat spacer rings shall be used for height corrections of l/16 inch (1.6 mm) to l-15/16 inches (49 mm) in l/l6 inch (1.6 mm) increments. Flat spacer ring dimensions are shown in Figure 12. If specified, grooved spacer rings shall be used for height corrections of l/4 inch (3.2 mm) to l-15/16 inches (49 mm) in l/16 inch (1.6 mm) increments. Grooved spacer ring dimensions are shown in Figure 12.

**3.2.4.4 Bolts.** Bolts suitable for use in the threaded holes as shown in Figures 10, 11, and 12 shall be supplied with each spacer ring. These bolts shall be of sufficient length to provide a full thread connection with the container flange when the spacer ring is inserted between the light fixture and the container flange. If containers or extensions are ordered without spacer rings, bolts conforming to the dimensions specified in the notes in Figures 10, 11, and 12 shall be supplied. All bolts shall be fabricated from 18-8 stainless steel and shall be supplied with locking washers.

**3.2.5 Type L-868, Class II, Containers and Extensions.** Type L-868 containers and extensions, Class II, shall be field fabricated from suitable materials and in such a manner as to meet the appropriate testing requirements given in paragraphs 4.1 and 4.2.

**3.2.5.1 Flange.** The flange shall be fabricated from suitable materials meeting the following critical dimensions: bolt circle pattern and diameter (Figure 13, dia B); inner diameter of flange (Figure 13, dia C); bolt hole diameter and threading (Figure 13); and angle of the flat surface of the flange to the axis of the body (paragraph 3.2.5.1). If specified, the "O" ring groove shall be dimensioned as shown Figure 12. The method and details of anchoring the flange to the surrounding pavement or embedment material is left to the manufacturer. However, the flange shall be attached to the body such that it will pass the torque test requirements of paragraph 4.1.6.2. Flange thickness and material shall be sufficient to pass the load test specified in paragraph 4.1.6.1. The flange face, outside and inside diameter, shall be finished in accordance with ANSI B 46.1.

**3.2.5.2 Body.**

**3.2.5.2.2** The body, sides and bottom, is formed from either the surrounding paving material or from embedment material, depending on the application, as shown in Figure 14. Field fabricated containers shall be designed to ensure the minimum thickness of paving or embedment material, as determined by load testing and torque testing (paragraphs 4.1.6.1 and 4.1.6.2), will always be achieved during installation.

**3.2.5.2.2.1 Inner Form.** The inner form provides a cavity beneath the mounting flange to house electrical equipment. The inner form shall be of sufficient rigidity and strength to withstand the rigors of shipping, handling, short-term outdoor storage (90 days minimum), and placement without damage or permanent distortion. The inner form shall not leak or deform during placement of paving material or embedment material (if required). The inner form may be designed to be removable after curing of the paving or embedment material or to be left in place. If designed to be removable, the inner form shall be capable of being easily removed without damage to the container. If designed to be left in place, its presence shall not affect the performance of the lighting system. The inner form may be adjustable to provide a variable depth cavity beneath the mounting flange.

**3.2.5.2.2.2 Anchorage Devices.** The mounting flange shall be firmly attached to the surrounding paving or embedment material. Anchorage devices shall be sized, shaped, and located as necessary to satisfy the torque test requirements for prototype and production testing. The minimum thickness of paving or embedment material over anchorage devices shall be 7/16 inch (11 mm). Anchorage devices shall be corrosion resistant materials and shall not induce corrosion by galvanic action with the mounting flange or reaction with the embedment materials.

**3.2.5.2.2.3 Embedment Materials.** Embedment materials are required for field fabricated containers installed in flexible pavements and those installed in existing pavements. Embedment materials shall have a minimum 28 day compressive strength of 5000 psi (34 MPa) when tested in accordance with ASTM C 109. When the pavement is to be opened to traffic before 28 days, a minimum compressive strength of 3000 psi (21 MPa), ASTM C 109, must be attained at the time of opening for traffic. In addition, the embedment material shall exhibit no shrinkage when tested in accordance with ASTM C 827. The manufacturer shall furnish the embedment material to be used with field fabricated kits. The type of embedment material shall be the same as that approved under prototype testing. Detailed instructions on proportioning and mixing of the embedment material shall be provided. Any restrictions on placement, such as temperature, moisture, etc., shall be provided by the manufacturer.

**3.2.5.3 Extensions.** Extensions for Class II, L-868 containers shall be designed and constructed such that the extension conforms to the following requirements. The flange shall be identical to that specified in paragraph 3.2.5.1. The thickness of the sidewalls of the extension shall be equal to or greater than that used for containers as specified in paragraph 3.2.5.2. The minimum length of field fabricated extensions shall be 6 inches (152 mm). Extensions are depicted in Figure 15.

**3.2.5.4 Bolts.** Bolts suitable for use in the threaded holes, as shown in Figures 13, 14, and 15, shall be supplied with each spacer ring. These bolts shall be of sufficient length to provide a full thread connection with the container flange when the spacer ring is inserted between the light fixture and the container flange. If containers or extensions are ordered without spacer rings, bolts conforming to the dimensions specified in the notes in Figures 13, 14, and 15 shall be supplied. All bolts shall be fabricated from 18-8 stainless steel and shall be supplied with locking washers.

**3.2.6 Accessories.** Various accessories are necessary to facilitate construction involving Type L-868 containers or make corrections or adjustments to Type L-868 containers. These accessories are detailed in Figure 16.

**3.2.7 Type L-869, Containers and Extensions.** Type L-869 containers, extensions, and covers shall be fabricated, as shown in Figures 17, 18, and 19, from suitable ferrous materials to provide units that will meet the appropriate test requirements in paragraphs 4.1 and 4.2.

**3.2.7.1 Flange.** The dimensions of the flange shall be as shown in Figure 17. The flange's top face, outside and inside diameter, and "O" ring groove shall be machine finished as shown in Figure 17. The flat surface of the flange shall be installed at an angle of 90 degrees, plus or minus 0.25 degrees, to the axis of the cylindrical body of the container. The flange shall be oriented such that the cover mounting holes will be located 45 degrees from the axis of the holes in the body sidewalls. The flange shall be continuously attached to the body to provide a watertight seal. The flange face, outside and inside diameter, shall be finished in accordance with ANSI B 46.1. An "O" ring shall be supplied in accordance with the details in Figure 17.

**3.2.7.2 Body.** The body section, sides and bottom, may be formed from one or more pieces. The length of the one-piece body section shown in Figure 18 shall be considered a standard, but the overall length may vary to meet specific conditions. Four 3/4-inch (19 mm) holes shall be provided in the sidewalls as shown in Figure 18. The location of the holes, as shown in Figure 17, shall be considered standard, however, the size, number, and location of the holes may be varied to meet special conditions. Rubber grommets, as shown in Figure 18, shall be provided with each container unless l-inch (25 mm) conduit connections are specified in lieu of grommets. Any sharp edges at the conduit entrances shall be removed to prevent cutting or chafing of the cable insulation.

**3.2.7.3 Extensions.** The dimensions of extensions shall be as shown in Figure 19. The minimum extension length shall be 2 inches (50 mm). Four 3/4-inch (19 mm) holes shall be provided in the sidewalls as shown in Figure 19. The top flange of the extension shall contain an "O" ring groove as shown in Figure 19. One "O" ring, as detailed in Figure 17, and four rubber grommets, as detailed in Figure 18, shall be supplied with each extension. For height adjustments of less than 2 inches (50 mm), the thickness of the cover shall be varied from a minimum of 3/4 inch (19 mm) to a maximum of l-15/16inches (49 mm). Cover dimensions are shown in Figure 19. * *

**3.2.7.4 Bolts.** Bolts suitable for use in the threaded holes, as shown in Figures 17, 18, and 19, shall be supplied with each container and extension. These bolts shall be of sufficient length to provide a full thread connection with the container flange and cover. All bolts shall be fabricated from 18-8 stainless steel and shall be supplied with locking washers.

**3.2.8 Ground Lug.** If specified, a ground connector shall be supplied with each container. For steel containers, a steel lug shall be welded to the interior or exterior wall of each container before galvanizing. The details and location of the ground lug are shown in Figures 2 and 11. The location of the lug may be varied to meet specified conditions. A bronze or copper ground connector shall be fastened to the steel lug after galvanizing. For Class II containers, the bronze or copper ground connector shall be placed so it provides a positive ground connection to the light fixture base.

**3.2.9 Drains.** If specified, a drain shall be provided in the bottom of the container prior to galvanizing. When not otherwise specified, the drain shall be 3/4 inch in diameter. When provisions for a drain pipe are specified, a half coupling shall be attached to the bottom of the container prior to galvanizing. See Figures 2, 6, and 11 for details.

**3.2.10 Protective Coating.** After fabrication, burrs and sharp edges shall be removed, and all ferrous metal parts shall be treated for corrosion protection. Prior to tapping operations, all parts of containers, extensions, and spacer rings in excess of l/4 inch (6.35 mm) in thickness shall be hot-dip galvanized, as specified in ASTM A 386, Class A, and applied in accordance with ASTM A 385. Flanges, covers, and rings shall be wiped smooth to a

* flatness of plus or minus 0.010 inch (0.254 mm). Plates and rings l/4 inch (6.35 mm) or less in thickness, grooved extensions, and grooved spacer rings shall be plated with zinc in accordance with the requirements of Federal * Specification QQ-Z-325, Type II, Class I, or with cadmium in accordance with the requirements of Federal Specification QQ-P-416, Type II, Class I. Tapped holes shall be protected with a polyurethane varnish or equivalent. A zinc dust primer meeting MIL-P-26915 (USAF) shall be permitted for touchup. The area covered by zinc dust primer shall not exceed 10 percent of the total treated area. Any cast iron may be coated with a minimum of 2.0 mils of oxyplast powder in lieu of galvanizing.

**4. QUALITY ASSURANCE PROVISIONS.** Equipment produced under this specification may be eligible for funding for installation on airports under Federal grant assistance programs for airports. In order to be eligible for installation under Federal grant assistance programs, manufacturers of the types of equipment specified herein are required to certify or furnish proof to the airport sponsor, or the sponsor's representative, that the equipment conforms to the following prototype, production, certification, and guarantee provisions established below:

**4.1 Prototype Testing.** Prototype testing delineated below is intended to assure that the materials and fabrication methods are adequate to provide acceptable in-service performance of containers. Prototype testing is required for each type, class, and size of container produced.

**4.1.1 Type L-867, Class I.** Type L-867, Class I, containers and extensions fabricated in accordance with the materials and dimensions specified herein shall be capable of passing the following tests:

**4.1.1.1 Load Test.** Sample containers and extensions shall be subject to the load test described below. The container and cover assembly or assemblies including spacer rings, extensions, and multi-section bodies shall be bolted together and placed on a flat steel plate mounted in a standard testing machine. The test specimen shall be composed of a body section of standard length, 24 inches (610 mm), with two 2-inch (50 mm) conduit connections or grommet holes located in the body section, diametrically opposed, 2-l/2 inches (64 mm) from the bottom of the container. Adjustable height containers shall be load tested with the assembly unextended. A load shall be applied to the top part of the container through a block of rubber l-1/2 inches (38 mm) thick, with a diameter equal to the cover plate, and having a durometer hardness of 55 to 70. A load of 250 psi (1724 kPa) shall be applied uniformly over the area of the rubber block at a rate not to exceed 10,000 pounds (4536 kg) per minute. The container, or any of the components, shall be considered unsatisfactory if there is any permanent deformation or cracking of material or coating. The above test will be repeated three times. After each loading, bolts shall be checked for loss of tension. The bolts shall bc torqued to the manufacturer's recommended service tension after the first two loadings. The container and/or assembly will be considered unsatisfactory if there is any loss of tension in the bolts after the third loading.

**4.1.1.2 Leakage Test.** This test shall be performed after each assembly has undergone the load test described in paragraph 4.1.1.1. An internal air or hydraulic pressure of 12 psi, plus or minus 2 psi, (83 kPa, plus or minus 14 kPa) shall be maintained within the assembly using pressure fittings and plugs in the conduit connections. A high foam soap or detergent solution of low surface tension shall be brushed on welds, seams, and joints to detect leakage. Alternatively, the assembly may be submerged in a tank of water while pressurized to detect any air leakage. The assembly shall be considered unsatisfactory if leakage is evident. Bases with grommet entrances shall also be dunk tested with grommets and conduit in place. The conduit entrances shall be placed at least 24 inches (0.6 m) below the water surface. Any leakage of water into the assembly shall be cause for rejection.

**4.1.1.3 Dimensional Tests.** Specimens shall be measured for conformance to the dimensions specified in paragraphs 3.2.1.1, 3.2.1.2, 3.2.1.3, and 3.2.1.4 and Figures 1, 2, 3, and 4, as applicable.

**4.1.1.4 Protective Coating Thickness Test.** The thickness of protective coatings shall equal or exceed those specified herein. The weight of hot-dip galvanizing shall be tested according to the method described in ASTM A 153. Zinc plating thickness shall be tested by either method described in Federal Specification QQ-Z-325. Cadmium plating thickness shall be tested by either method described in Federal Specification QQ-P-416.

**4.1.1.5 Visual Inspection.** Each unit shall be visually inspected for quality of workmanship and materials. Particular attention shall be given to smoothness and continuity of welds and seams, flatness and smoothness of the flange surface, complete and uniform application of the protective coating, freedom from excess zinc, and absence of burrs and sharp edges.

**4.1.2 Type L-867, Class II.** Type L-867, Class II, containers and extensions fabricated from materials or to dimensions as specified herein shall be capable of passing the following tests.

**4.1.2.1 Load Test.** Sample containers and extensions shall be subject to the load test described in paragraph 4.1.1.1 above.

**4.1.2.2 Leakage Test.** Sample containers and extensions shall be subject to the leakage test described in paragraph 4.1.1.2 above.

**4.1.2.3 Temperature Shock Test.** Temperature shock test requirements apply to Class II, non-ferrous, Type L-867 containers only. A temperature shock test shall be conducted on a completed non-ferrous container assembly. The test shall be performed according to MIL-STD-810, Method No. 503.2, Section II, Procedure I. The high test temperature shall be plus 130°F (plus 54°C) and the low test temperature shall be minus 65°F (minus 54°C). This test shall be conducted on the assembly after the load test described in paragraph 4.1.2.1 has been concluded. Any cracking or joint separation of the materials making up the container assembly shall be cause for rejection.

**4.1.2.4 Dimensional Tests.** Specimens shall be measured for conformance to the following critical dimensions. Angle of the flat surface of the flange to the axis of the cylindrical body (paragraph 3.2.1.1), bolt circle pattern and diameter (Figure 5, dia B), outer diameter of flange (Figure 5, dia D), inner diameter of flange (Figure 5, dia C), bolt hole size and threading (Figure 5). Mounting flange and container wall thicknesses shall be measured and shall be equal to or greater than those required to pass the load test and torque test described in paragraphs 4.1.2.1 and 4.1.2.2 above.

**4.1.2.5 Protective Coating Thickness Test.** For components of the container or assembly requiring protective coatings, the thickness of protective coatings shall be tested in accordance with paragraph 4.1.1.4 above.

**4.1.2.6 Visual Inspection.** Containers shall be visually inspected in accordance with paragraph 4.1.1.5.

**4.1.3 Type L-868, Class I.** Type L-868, Class I, containers and extensions fabricated in accordance with the materials and dimensions specified herein shall be capable of passing the following tests.

**4.1.3.1 Load Test.** Sample containers and extensions shall be subject to the load test described in paragraph 4.1.1.1 above with the following exception. A load of 400 psi (2758 kPa) shall be applied uniformly over the area of the rubber block at a rate not to exceed 10,000 pounds (4536 kg) per minute.

**4.1.3.2 Leakage Test.** Sample containers and extensions shall be subject to the leakage test described in paragraph 4.1.1.2 above.

**4.1.3.3 Dimensional Tests.** Specimens shall be measured for conformance to the dimensions specified in paragraphs 3.2.5.1, 3.2.5.2, and 3.2.5.3 and Figures 15, 16, and 17.

**4.1.3.4 Protective Coating Thickness Test.** Specimens shall be tested in accordance with paragraph 4.1.1.4.

**4.1.3.5 Visual Inspection.** Specimens shall be subject to visual inspection as described in paragraph 4.1.1.5.

**4.1.4 Type L-868, Class II.** Type L-868, Class II, containers and extensions fabricated in accordance with the materials and dimensions specified herein shall be capable of passing the following tests.

**4.1.4.1 Load Test.** Two different load tests are specified depending on the intended application.

**4.1.4.1.1 Containers anchored into embedment material.** The test specimen shall consist of an assembly of the embedment material with or without the inner form, flange, and anchor devices. The assembly shall be placed on a flat steel plate mounted in a standard testing machine. The bottom of the base shall be placed on a layer of high-strength gypsum plaster or sulphur mortar (See ASTM C 617) prior to testing to provide uniform support to the assembly. The thickness of the high-strength gypsum plaster or sulphur mortar will be sufficient to accommodate any roughness or eccentricity of the base such that uniform bearing on the assembly is achieved. The high-strength gypsum plaster or sulphur mortar must be hardened prior to testing. A load shall be applied to the top part of the assembly through a l-1/2 inch (38 mm) thick rubber block with a diameter equal to that of the cover plate and having a durometer hardness of 55 to 70. A load of 400 psi (1724 kPa) shall be applied uniformly over the area of the rubber block at a rate not to exceed 10,000 lbs (4536 kg) per minute. The assembly shall be considered unsatisfactory if there is any permanent deformation or cracking of any of the components or the protective coating material. The above test shall be repeated three times. After each loading, bolts shall be checked for loss of tension. The bolts shall be torqued to the manufacturer's recommended service tension after the first two loadings. The assembly will be considered unsatisfactory if there is any loss of tension in the bolts after the third loading.

**4.1.4.1.2 Containers anchored to the surrounding pavement.** The test shall be performed on a specimen properly assembled and constructed so as to closely simulate actual installation in a pavement. The entire assembly, including the simulated pavement, shall be placed on a flat steel plate and loaded into a standard testing machine. The loading apparatus, applied load, loading rate, number of loadings, and bolt tightening shall be the same as described in paragraph 4.1.6.1.2.1 above. The container shall be considered unsatisfactory if it fails to support the applied load, if the flange deforms permanently, if the anchor devices pull out of the surrounding paving material, or if there is any loss of tension in the bolts after the third loading.

**4.1.4.2 Torque Test.** Two different torque tests are specified depending on the intended application.

**4.1.4.2.1 Containers anchored into the surrounding pavement.** The torque test shall be performed on a specimen properly assembled and constructed so as to closely simulate actual installation in a pavement. Prior to test, reference "tick" marks shall be made on the mounting flange and surrounding pavement material. A torque of 100,000 in-lbs (11 300 Nm) shall be applied perpendicular to the vertical axis of the container through a steel cover plate. The maximum torque shall be achieved within 60 seconds of the start of test. The torque load shall be applied three times. Upon completion of the third torque loading, the reference "tick" marks will be measured to determine if the support ring has been displaced in azimuth. An azimuth displacement of 0.25 degree or greater shall be cause for rejection.

**4.1.4.2.2 Containers anchored into embedment material.** After completion of load testing, specimens shall be subjected to torque testing as described in paragraph 4.1.5.3 above to ensure adequate material thicknesses, attachment, and assembly techniques. An azimuth displacement of 0.25 degree or greater shall be cause for rejection. Separation of the flange or bottom of the container from the body sidewalls, as well as buckling and/or permanent deformation of the body sidewalls shall also be cause for rejection.

**4.1.4.3 Dimensional Tests.** Specimens shall be measured for conformance to the dimensions specified in paragraphs 3.2.5.1, 3.2.5.2, and 3.2.5.3 and Figures 17, 18, and 19.

**4.1.4.4 Protective Coating Thickness Test.** For components of the container or assembly requiring protective coatings, the thickness of protective coatings shall be tested in accordance with paragraph 4.1.1.4 above.

**4.1.4.5 Visual Inspection.** Assemblies shall be visually inspected for quality of workmanship and materials. Particular attention shall be given to the condition of the embedment material, the inner form, and the mounting flange. The embedment material shall not contain any evidence of honeycombing or voids and shall provide positive support to the mounting flange. The inner form shall not show evidence of leakage or distortion due to construction or curing of the surrounding materials. The mounting

flange shall be flat and smooth, have a complete and uniform application of protective coating, and be free of burrs and sharp edges.

**4.1.5 Type L-869.** Type L-869 containers and extensions, fabricated in accordance with the materials and dimensions specified herein, shall be capable of passing the following tests:

**4.1.5.1 Load Test.** Sample containers and extensions shall be subject to the load test described in paragraph 4.1.1.1 above with the following exception. A load of 400 psi (2758 kPa) shall be applied uniformly over the area of the rubber block at a rate not to exceed 10,000 pounds (4536 kg) per minute.

**4.1.5.2 Leakage Test.** Sample containers and extensions shall be subject to the leakage test described in paragraph 4.1.1.2 above.

**4.1.5.3 Dimensional Tests.** Specimens shall be measured for conformance to the dimensions specified in paragraphs 3.2.5.1, 3.2.5.2, and 3.2.5.3 and Figures 15, 16, and 17.

**4.1.5.4 Protective Coating Thickness Test.** Specimens shall be tested in accordance with paragraph 4.1.1.4.

**4.1.5.5 Visual Inspection.** Specimens shall be subject to visual inspection as described in paragraph 4.1.1.5.

**4.2 Production Testing.** The following production testing requirements are intended to assure that adequate quality controls are exercised during production to provide equipment which will meet applicable specifications.

**4.2.1 Lot Size.** The lot size shall be equal to the daily production rate.

**4.2.2 Sample Size and Acceptance Criteria.** Production testing shall be based on the procedures given in MIL-STD-105, Sampling Procedures and Tables For Inspection By Attributes. Sample size and acceptance criteria shall be based on Table 1 (Sample size code letters), general inspection level I, Table II-A (Single sampling plans for normal inspection), and an Acceptable Quality Level (AQL) of 2.5. Note that normal inspection may be switched to reduced inspection provided the conditions set forth in MIL-STD-105 are met.

**4.2.3 Retesting.** If the lot is rejected, the remainder of the lot (excludes samples tested and inspected under paragraph 4.2.2) may be tested and inspected on an individual basis. As an alternative to individual testing and inspection, the remainder of the lot may be tested using criteria in MIL-STD-105 for multiple sampling. Table IV-B, Multiple Sampling Plans for Tightened Inspection, using the appropriate sample size and an AQL of 2.5, shall be used. Should the lot fail under the multiple sampling plan criteria, all units shall be inspected and tested individually and repaired as necessary. Any samples that fail under any of the above criteria shall be repaired prior to shipment.

**4.2.4 Type L-867, Class I.**

**4.2.4.1 Dimensional Tests.** Random samples from each lot shall be subjected to dimensional tests as described in paragraph 4.1.1.3 above.

**4.2.4.2 Visual Inspection.** Random samples from each lot shall be subjected to visual inspection as described in paragraph 4.1.1.5 above.

**4.2.4.3 Leakage Test.** Random samples from each lot shall be subjected to the leakage test described in paragraph 4.1.1.2 above, except that load testing of production samples is not required.

**4.2.5 Type L-867, Class II.**

**4.2.5.1 Dimensional Tests.** Random samples from each lot shall be tested in accordance with paragraph 4.1.2.4 above.

**4.2.5.2 Visual Inspection.** Random samples from each lot shall be visually inspected in accordance with paragraph 4.1.1.5.

**4.2.5.3 Leakage Test.** Random samples from each lot shall be subjected to the leakage test described in paragraph 4.1.1.2 above, except that load testing of production samples is not required.

**4.2.6 Type L-868, Class I.**

**4.2.6.1 Dimensional Test.** Random samples from each lot shall be tested for conformance to the dimensional test described in paragraph 4.1.3.3 above.

**4.2.6.2 Visual Inspection.** Random samples from each lot shall be inspected for conformance to the requirements in paragraph 4.1.3.5 above.

**4.2.6.3 Leakage Test.** Random samples from each lot shah be subjected to the leakage test described in * paragraph 4.1.1.2 above, except that load testing of production samples is not required. *

**4.2.7 Type L-868, Class II.**

**4.2.7.1 Dimensional Tests – Flanges.** A lot shall consist of not more than 50 units or the total number of units required for the entire project, whichever is less. Random samples from each lot shall be tested in accordance with paragraph 4.1.4.3 above, prior to shipment.

**4.2.7.2 Visual Inspection.** Random samples from each day's fabrication shall be visually inspected in accordance with paragraph 4.1.4.5.

**4.2.7.3 Load Test.** Random samples from each lot shall be load tested in the field by the following procedure: A vertical load of at least 40,000 pounds shall be applied to the top part of the container through a block of rubber 1-1/2 inches (38 mm) thick, with a diameter equal to the cover plate, and having a durometer hardness of 55 to 70. The load shall be applied at a rate not to exceed 10,000 pounds (4536 kg) per minute. The container, or any of the components, shall be considered unsatisfactory if there is any permanent deformation or cracking of materials or coatings. The above test shall be repeated three times. After each loading, bolts shall be checked for loss of tension. The bolts shall be torqued to the manufacturer's recommended service tension after the first two loadings. The container and/or assembly will be considered unsatisfactory if there is any loss of tension in the bolts after the third loading.

**4.2.7.4 Torque Test.** Random samples from each lot shall be torque tested in the field by the following procedure: Prior to test, reference "tick" marks shall be made on the mounting flange and surrounding pavement material. A torque of 100,000 in-lbs (11 300 Nm) shall be applied perpendicular to the vertical axis of the container through a steel cover plate. The maximum torque shall be achieved within 60 seconds of the start of test. The torque load shall be applied three times. Upon completion of the third torque loading, the reference "tick" marks will be measured to determine if the mounting flange has been displaced in azimuth. An azimuth displacement of 0.25 degrees or greater shall be cause for rejection.

**4.2.8 Type L-869.**

**4.2.8.1 Dimensional Test.** Random samples from each lot shall be tested for conformance to the dimensional test described in paragraph 4.1.5.3 above.

**4.2.8.2 Visual Inspection.** Random samples from each lot shall be inspected for conformance to the requirements in paragraph 4.1.5.5 above.

**4.2.8.3 Leakage Test.** Random samples from each lot shall be subjected to the leakage test described in * paragraph 4.1.1.2 above, except that load testing of production samples is not required. *

**4.3 Certification.** Manufacturers shall certify that all components, fabrication techniques, and materials conform to those specified herein and are equal to or better than those used for the approved prototype.

**4.4 Guarantee.** The manufacturer agrees to provide the following minimum guarantee for the equipment:

"That the equipment has been manufactured and will perform in accordance with the applicable specifications and that any defect in design, materials, or workmanship that may occur during proper and normal use during a period of 1 year from date of installation or a maximum of 2 years from date of shipment will be corrected by repair or replacement by the manufacturer f.o.b. factory."

## 5. PREPARATION FOR DELIVERY.

**5.1 Packing.** Equipment shall be carefully packaged for shipment and delivery to avoid damage and/or corrosion.

**5.2 Marking.** Equipment shall be marked for shipment with the consignee's name and address, and other pertinent information as needed by the installer.

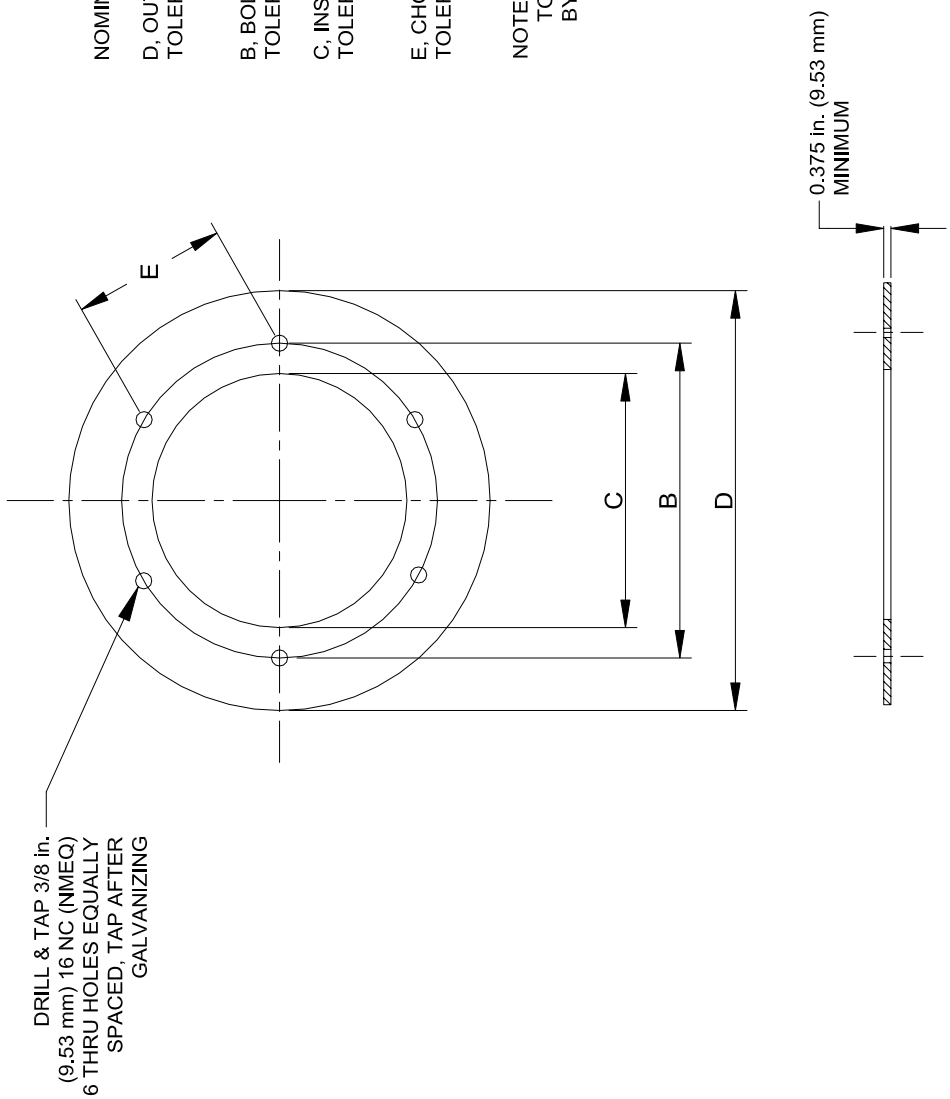


| SIZES | B | D |
|---|---|---|
| NOMINAL DIAMETER | 12 | 16 |
| D, OUTSIDE DIA. TOLERANCES, D | 13.500 +0.100 -0.000 | 17.375 +0.100 -0.000 |
| B, BOLT CIRCLE TOLERANCES, B | 10.250 ±0.010 | 14.250 ±0.010 |
| C, INSIDE DIA. TOLERANCES, C | 8.000 +0.060 -0.000 | 12.375 +0.060 -0.000 |
| E, CHORD TOLERANCES, E | 5.125 ±0.005 | 7.125 ±0.005 |

NOTE: ALL DIMENSIONS ARE SHOWN IN INCHES, TO CONVERT FROM in. TO mm, MULTIPLY BY 25.4. NMEQ MEANS NO METRIC EQUIVALENT.

**Figure 1. Flange, Type L-867, Class I**

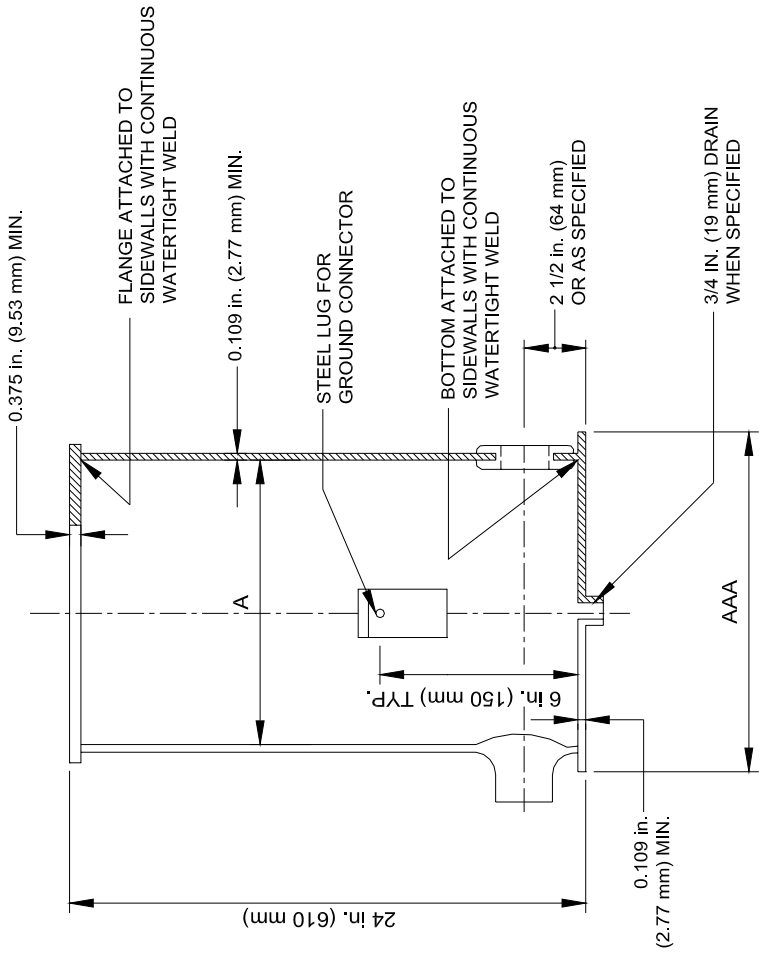


| NOMINAL DIAMETER | SIZES 12 | 16 |
|---|---|---|
| A, INSIDE DIA. TOLERANCES, A | 12.375 ±0.375 | 16.250 ±0.375 |
| AAA, BOTTOM DIA., AAA | 13.500 | 17.375 |

NOTES:

1. CONDUIT ENTRANCES ARE TO BE MADE THE BOLT HOLE AXIS OF THE FLANGE WITH AN ANGULAR TOLERANCE OF ±1°.
2. SUPPLY SIX 18-8 STAINLESS STEEL HEX HEAD 3/8 in. (9.53 mm) 16 UNC-2 (NMEQ) BOLTS 1 in. (25 mm) LONG WITH EACH CONTAINER.
3. DIMENSIONS ARE SHOWN IN INCHES. TO CONVERT FROM in. TO mm, MULTIPLY BY 25.4. NMEQ MEANS NO METRIC EQUIVALENT.

**Figure 2. Body, Type L-867, Class I**

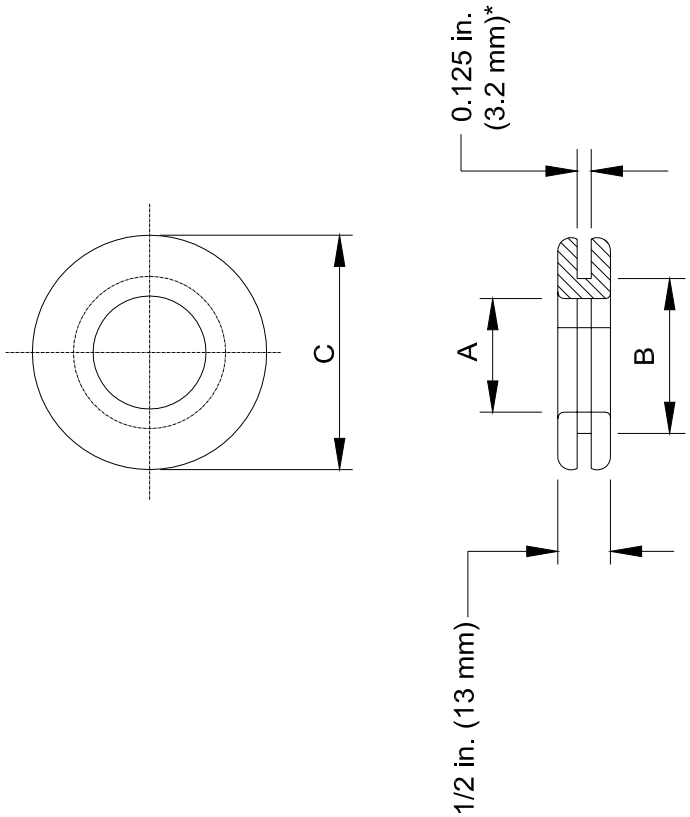


| SIZES | A | B | C |
|---|---|---|---|
| 3/4 (19) | 1 (25) | 1-3/8 (35) | 1-7/8 (48) |
| 1 (25) | 1-5/16 (33) | 1-11/16 (43) | 2-3/16 (56) |
| 1-1/2 (38) | 1-7/8 (48) | 2-1/4 (57) | 3 (76) |
| 2 (51) | 2-3/8 (60) | 2-3/4 (70) | 3-3/8 (86) |
| 3 (76) | 3-1/2 (89) | 3-7/8 (98) | 4-1/2 (114) |

NOTES:

1. GROMMETS SHALL BE MADE OF NEOPRENE RUBBER, 55 DUROMETER MINIMUM.

2. * SIZED FOR 0.109 in. (2.77 mm) WALL THICKNESS, SIZE PROPORTIONALLY FOR OTHER WALL THICKNESSES.

3. NUMBERS SHOWN IN PARENS. ARE IN mm.

4. A DIMENSION RELATIVE TO B DIMENSION MAY BE VARIED TO PERMIT SEVERAL DIFFERENT CONDUIT SIZES TO ENTER BODY SIDEWALLS THROUGH SAME SIZE HOLE IN SIDEWALL.

**Figure 2 (continued)**

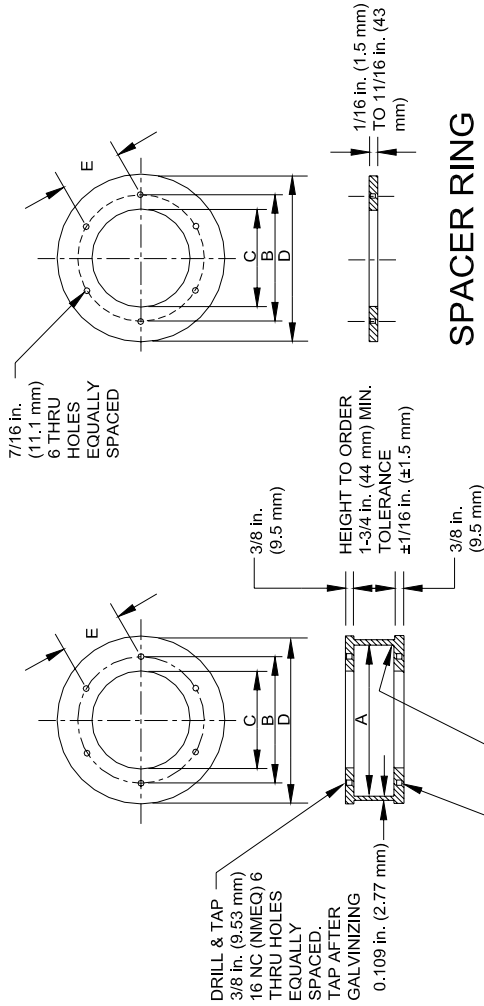


SIZES

| NOMINAL DIAMETER | B 12 | D 16 |
|---|---|---|
| D, OUTSIDE DIA. TOLERANCES, D | 13.500 +0.100 -0.000 | 17.375 +0.100 -0.000 |
| B, BOLT CIRCLE TOLERANCES, B | 10.250 ±0.010 | 14.250 ±0.010 |
| C, INSIDE DIA. TOLERANCES, C | 8.000 +0.060 -0.000 | 12.375 +0.060 -0.000 |
| E, CHORD TOLERANCES, E | 5.125 ±0.005 | 7.125 ±0.005 |
| A, ACTUAL DIA. TOLERANCES, A | 12.375 ±0.125 | 16.250 ±0.125 |

NOTES:

1. HOLES IN TOP AND BOTTOM OF EXTENSION SHALL BE ALIGNED.

*2. SUPPLY SIX STAINLESS STEEL 18-8 HEX HEAD 3/8 in. (9.53 mm) 16 UNC (NMEQ) BOLTS WITH EACH EXTENSION SUFFICIENTLY LONG TO EXTEND THRU THE BOTTOM OF THE EXTENSION AND PROVIDE A MINIMUM 1/2 in. (13 mm) THREAD ENGAGEMENT WITH EXISTING FLANGE.

*3. SUPPLY SIX STAINLESS STEEL 18-8 HEX HEAD 3/8 in. (9.53 mm) 16 UNC (NMEQ) BOLTS WITH EACH EXTENSION SUFFICIENTLY LONG TO EXTEND THRU THE FIXTURE AND PROVIDE A MINIMUM 1/2 in. (13 mm) THREAD ENGAGEMENT WITH THE TOP OF THE EXTENSION.

*4. SUPPLY SIX STAINLESS STEEL 18-8 HEX HEAD 3/8 in. (9.53 mm) 16 UNC (NMEQ) BOLTS WITH EACH SPACER RING SUFFICIENTLY LONG TO EXTEND THRU THE FIXTURE AND SPACER RING AND PROVIDE A MINIMUM 1/2 in. (13 mm) THREAD ENGAGEMENT WITH THE TOP OF THE EXISTING FLANGE.

*5. TABULATED DIMENIONS ARE IN INCHES, TO CONVERT FROM in. TO mm, MULTIPLY BY 25.4. NMEQ MEANS NO METRIC EQUIVALENT.

**Figure 3. Extensions, Type L-867, Class I**

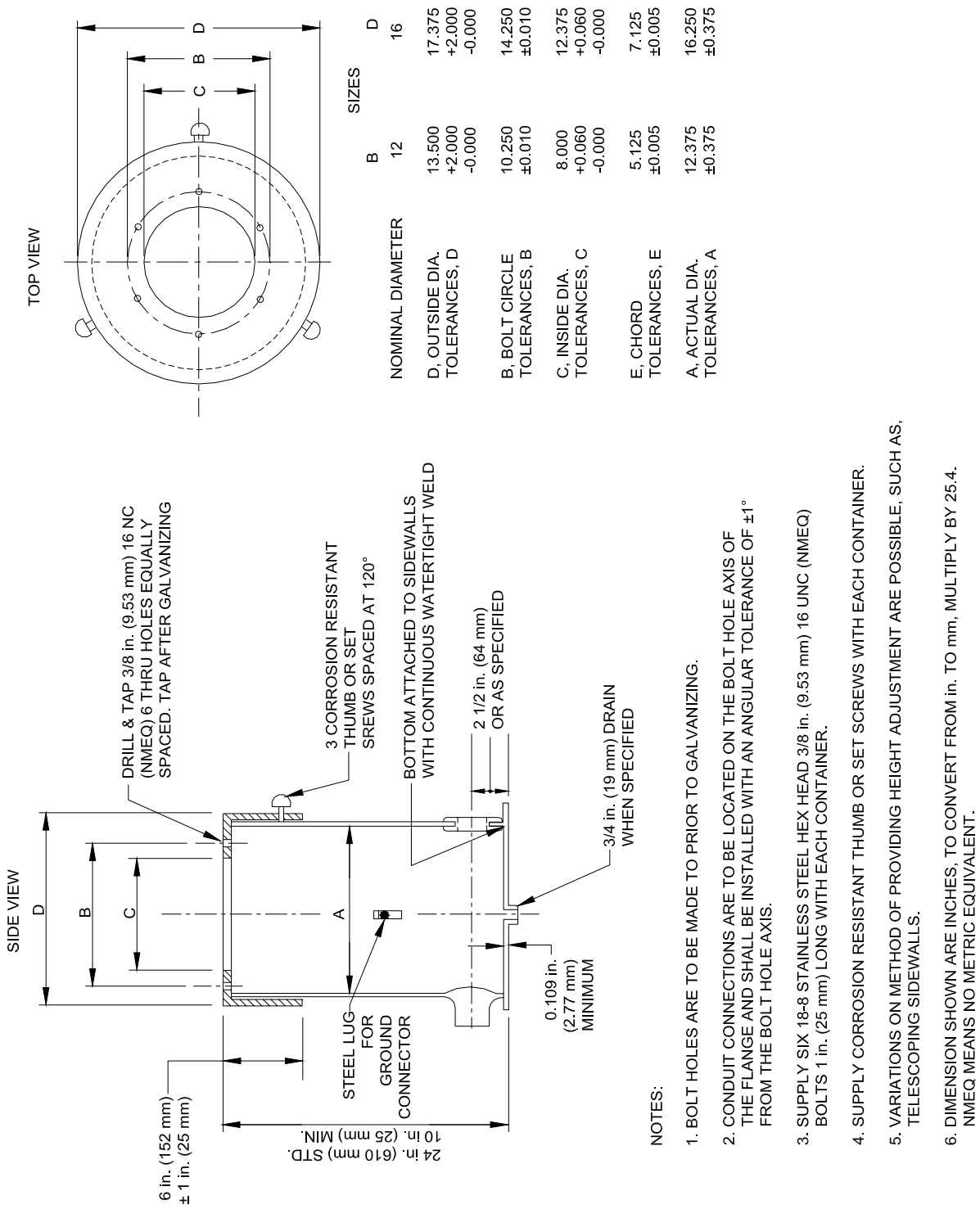


**Figure 4. Adjustable, Type L-867, Class I**

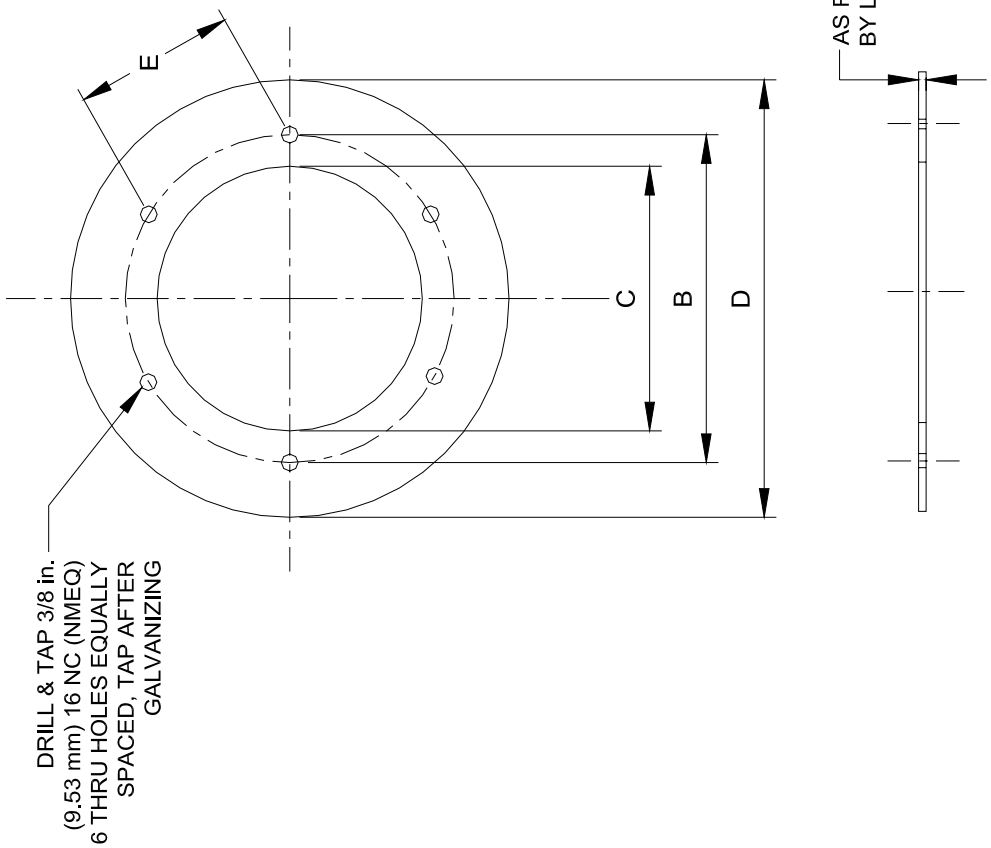


| NOMINAL DIAMETER | SIZES B 12 | D 16 |
|---|---|---|
| D, OUTSIDE DIA., D | 13.500 MIN. | 17.375 MIN. |
| B, BOLT CIRCLE TOLERANCES, B | 10.250 ±0.010 | 14.250 ±0.010 |
| C, INSIDE DIA. TOLERANCES, C | 8.000 +0.060 -0.000 | 12.375 +0.060 -0.000 |
| E, CHORD TOLERANCES, E | 5.125 ±0.005 | 7.125 ±0.005 |

NOTE: ALL DIMENSIONS ARE SHOWN IN INCHES, TO CONVERT FROM in. TO mm, MULTIPLY BY 25.4. NMEQ MEANS NO METRIC EQUIVALENT.

**Figure 5. Flange, Type L-867, Class II**

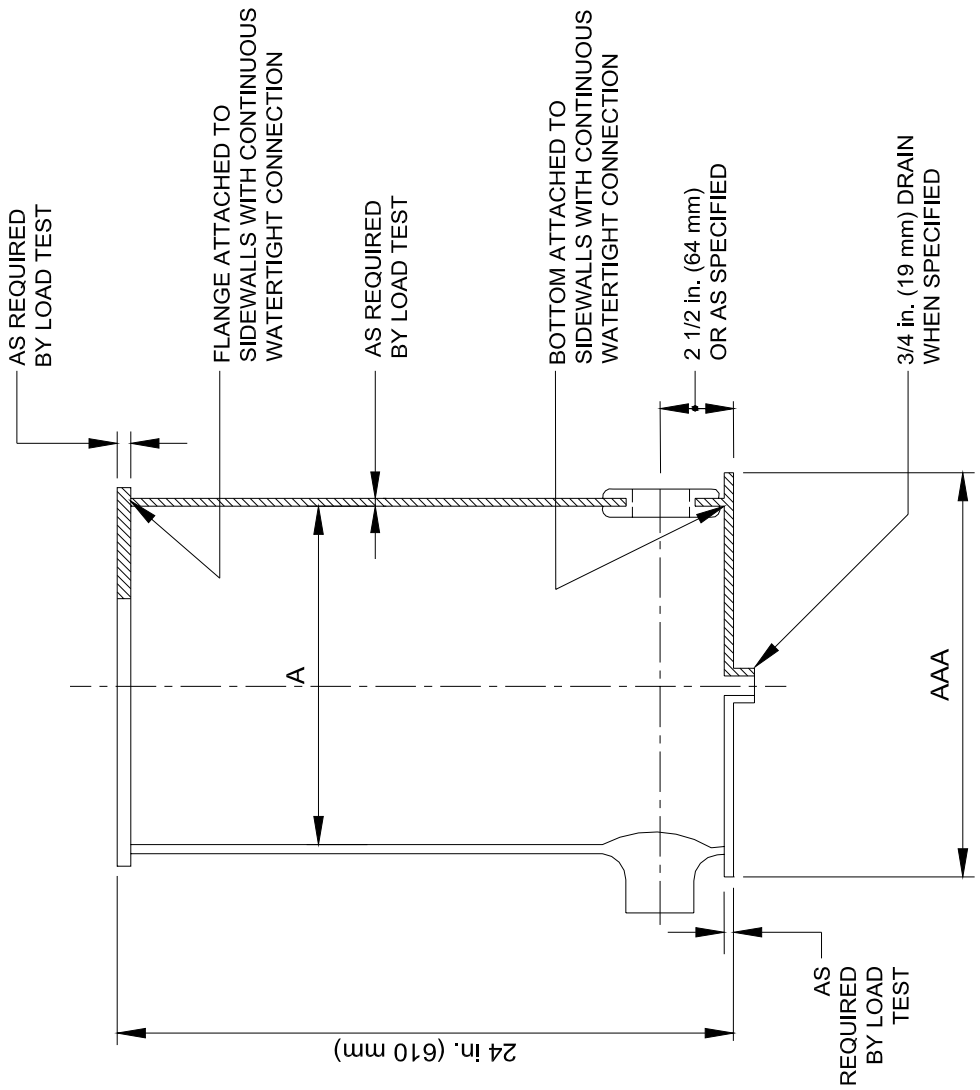


| NOMINAL DIAMETER | SIZES 12 | 16 |
|---|---|---|
| A, INSIDE DIA. TOLERANCES, A | 12.375 ±0.375 | 16.250 ±0.375 |
| AAA, BOTTOM DIA., AAA | 13.500 | 17.375 |

NOTES:

1. CONDUIT CONNECTIONS ARE TO BE LOCATED ON THE BOLT HOLE AXIS OF THE FLANGE WITH AN ANGULAR TOLERANCE OF ± 1°.
2. DIMENSIONS ARE SHOWN IN INCHES. TO CONVERT FROM in. TO mm, MULTIPLY BY 25.4. NMEQ MEANS NO METRIC EQUIVALENT.
3. SUPPLY SIX 18-8 STAINLESS STEEL HEX HEAD 3/8 in. (9.53 mm) 16 UNC-2 (NMEQ) BOLTS 1 in. (25 mm) LONG WITH EACH CONTAINER.

**Figure 6. Body, Type L-867, Class II**

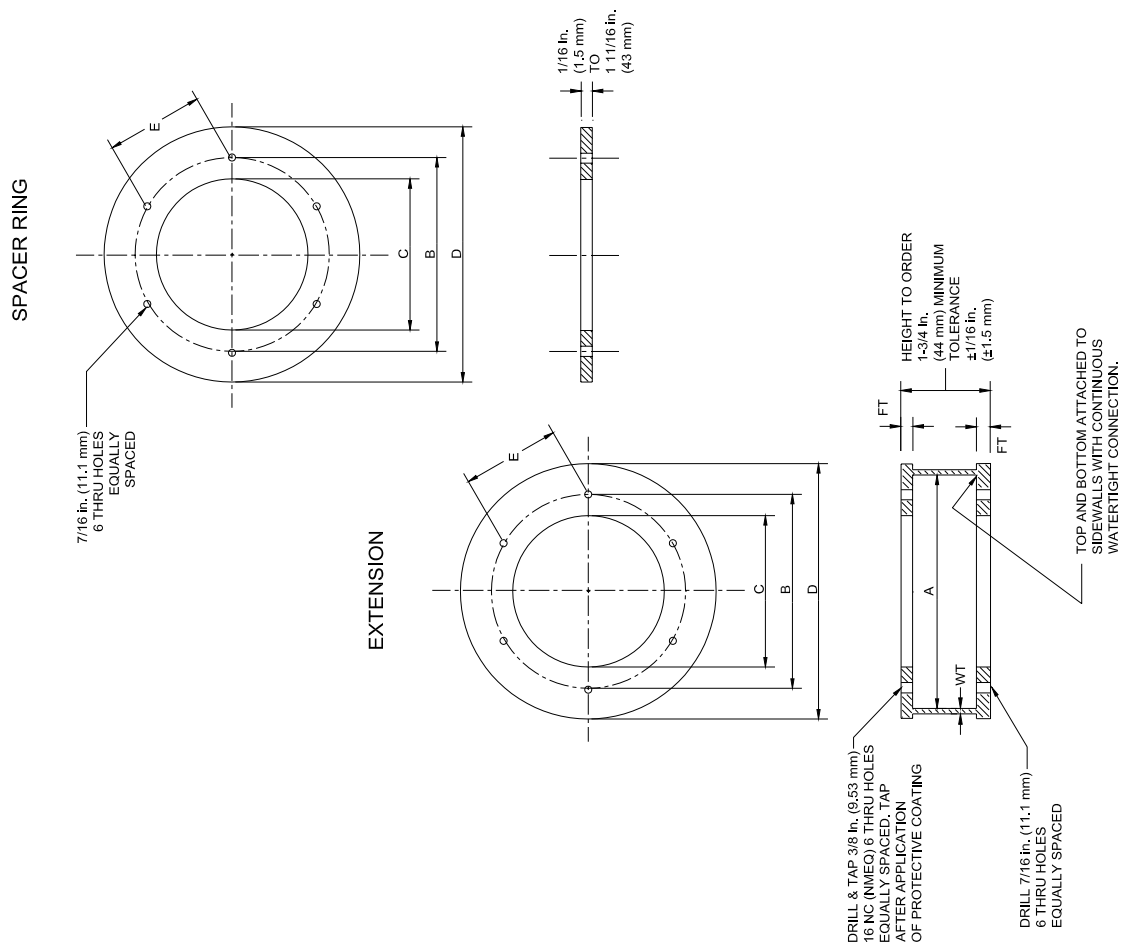


| | SIZES | |
|---|---|---|
| | B | D |
| NOMINAL DIAMETER | 12 | 16 |
| D, OUTSIDE DIA. MINIMUM | 13.500 | 17.375 |
| B, BOLT CIRCLE TOLERANCES, B | 10.250 ±0.010 | 14.250 ±0.010 |
| C, INSIDE DIA. TOLERANCES, C | 8.000 +0.060 -0.000 | 12.375 +0.060 -0.000 |
| E, CHORD TOLERANCES, E | 5.125 ±0.005 | 7.125 ±0.005 |
| A, ACTUAL DIA MINIMUM MAXIMUM | 12.250 13.600 - WT | 16.125 17.475 - WT |
| FT, FLANGE THICK | AS REQUIRED BY LOAD TEST | |
| WT, WALL THICK | AS REQUIRED BY LOAD TEST | |

NOTES:

1. HOLES IN TOP AND BOTTOM OF EXTENSIONS SHALL BE ALIGNED.
2. * SUPPLY SIX STAINLESS STEEL 18-8 HEX HEAD 3/8 in. (9.53 mm) 16 UNC (NMEQ) BOLTS WITH EACH EXTENSION SUFFICIENTLY LONG TO EXTEND THRU THE BOTTOM OF THE EXTENSION AND PROVIDE A MINIMUM 1/2 in. (13 mm) THREAD ENGAGEMENT WITH EXISTING FLANGE. *
3. * SUPPLY SIX STAINLESS STEEL 18-8 HEX HEAD 3/8 in. (9.53 mm) 16 UNC (NMEQ) BOLTS WITH EACH EXTENSION SUFFICIENTLY LONG TO EXTEND THRU THE FIXTURE AND PROVIDE A MINIMUM 1/2 in. (13 mm) THREAD ENGAGEMENT WITH THE TOP OF THE EXTENSION. *
4. * SUPPLY SIX STAINLESS STEEL 18-8 HEX HEAD 3/8 in. (9.53 mm) 16 UNC (NMEQ) BOLTS WITH EACH SPACER RING SUFFICIENTLY LONG TO EXTEND THRU THE FIXTURE AND SPACER TO PROVIDE A MINIMUM 1/2 in. (13 mm) THREAD ENGAGEMENT WITH THE TOP OF EXISTING FLANGE. *
5. * TABULATED DIMENSIONS ARE IN INCHES, TO CONVERT FROM in. TO mm, MULTIPLY BY 25.4. NMEQ MEANS NO METRIC EQUIVALENT. *

**Figure 7. Extensions, Type L-867, Class II**

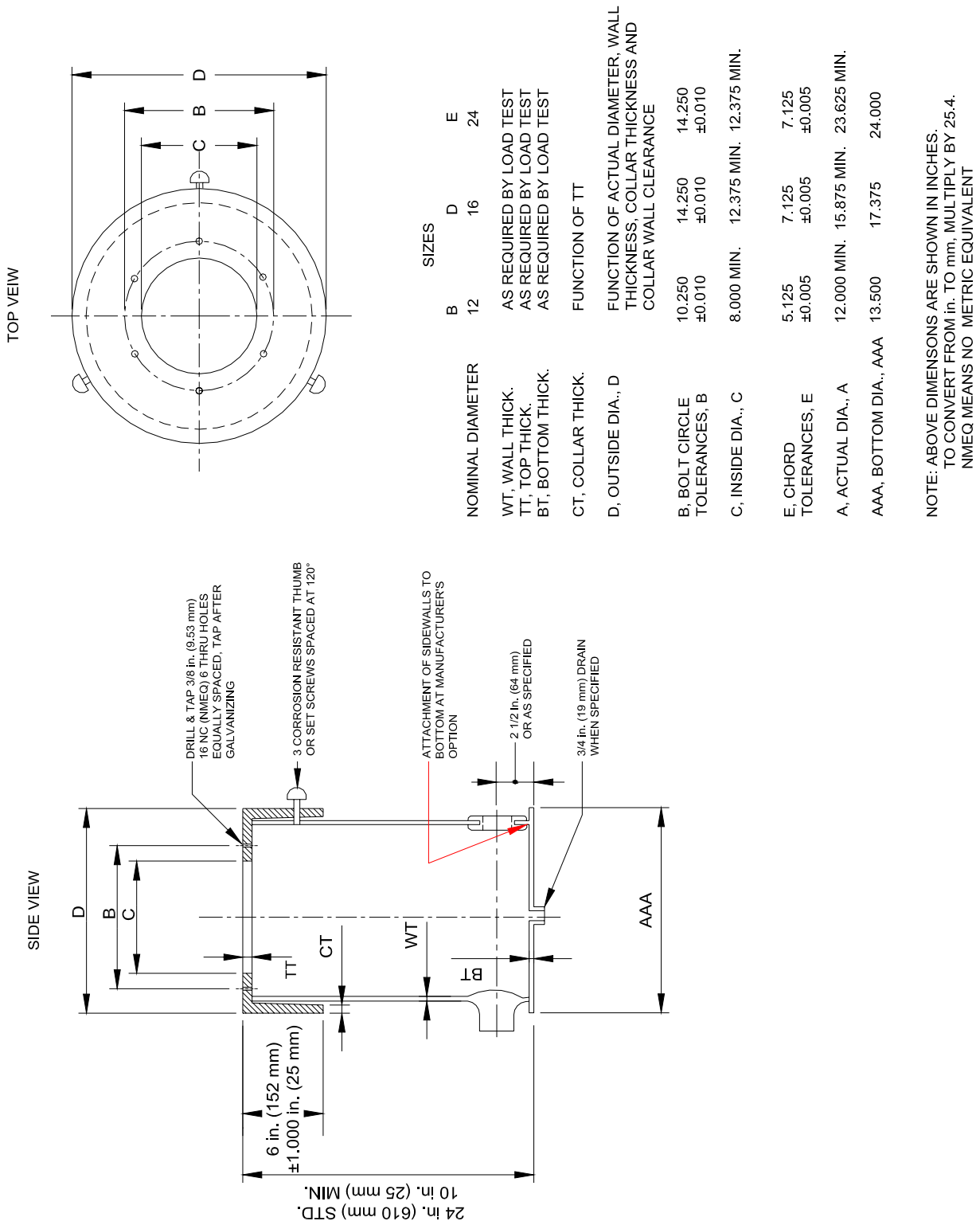


**Figure 8. Adjustable, Type L-867, Class II**

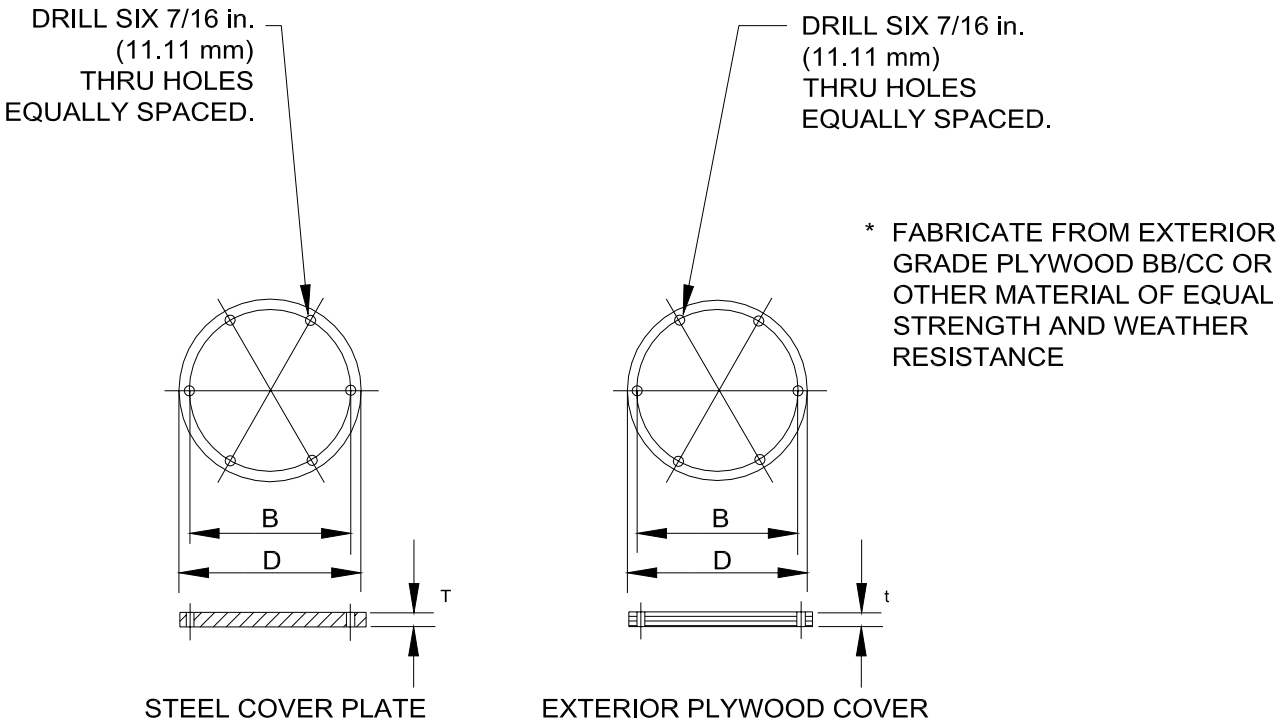


| | SIZES | |
|---|---|---|
| | B | D |
| D, OUTSIDE DIA. | 13.500 | 17.375 |
| TOLERANCES, D | +0.100<br>-0.000 | +0.100<br>-0.000 |
| B, BOLT CIRCLE DIA. | 10.250 | 14.250 |
| TOLERANCES, B | ±0.010 | ±0.010 |
| T, THICKNESS | 0.375 | 1.250 IN IMPACT AREAS<br>0.375 IN OTHER AREAS |
| t, THICKNESS | 1/2 | 1/2 |

NOTES:

1. SUPPLY 18-8 STEEL HEX HEAD 3/8 in. (9.53 mm) UNC 16 (NMEQ) BOLTS OF SUFFICIENT LENGTH TO PROVIDE FULL THREAD ENGAGEMENT WITH FLANGE.

2. DIMENSION TABULATED ABOVE ARE IN INCHES. TO CONVERT FROM in. TO mm, MULTIPLY BY 25.4. NMEQ MEANS NO METRIC EQUVALENT.

**Figure 9. Accessories, Type L-867**

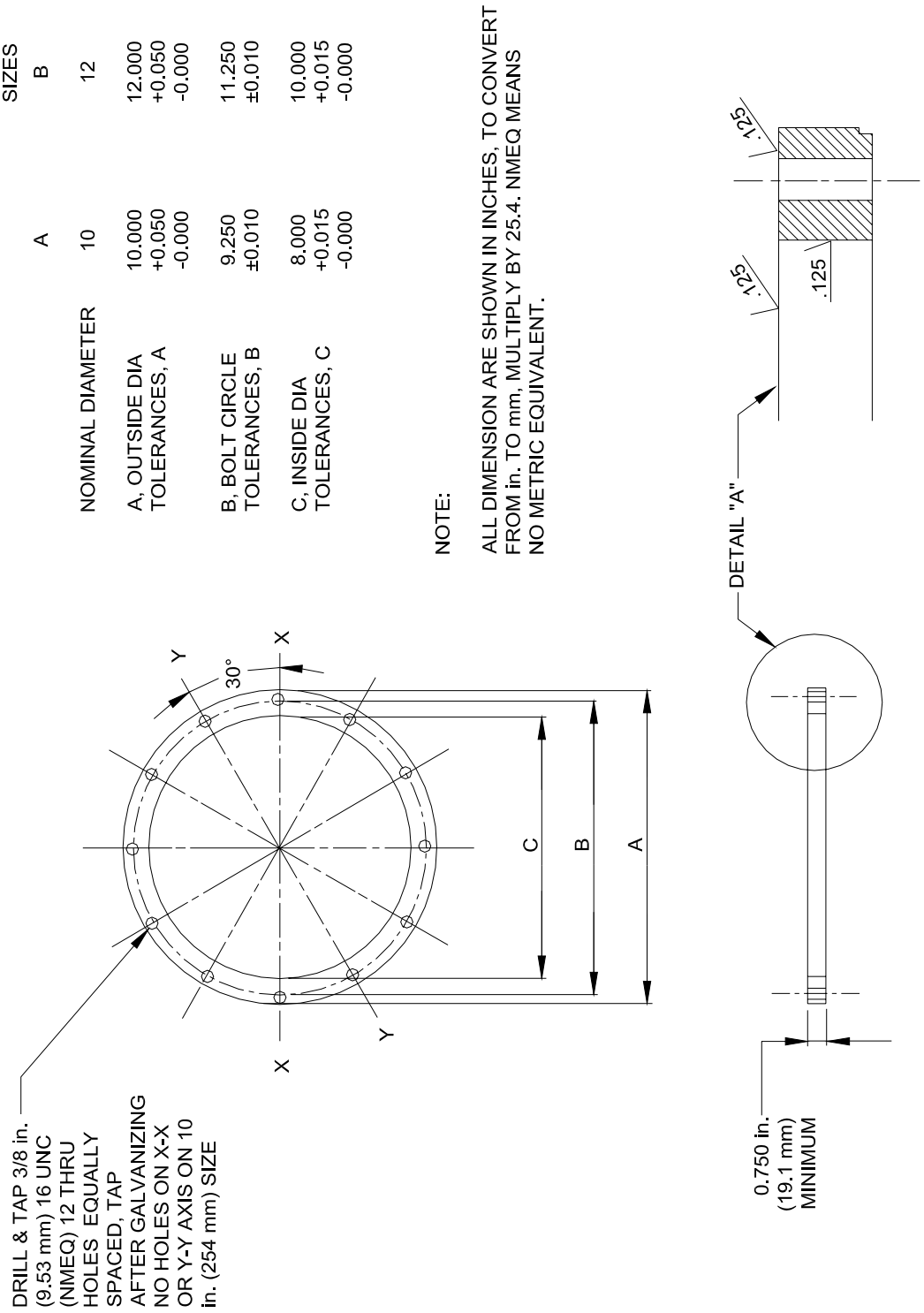


**Figure 10. Flange, Type L-868, Class I**

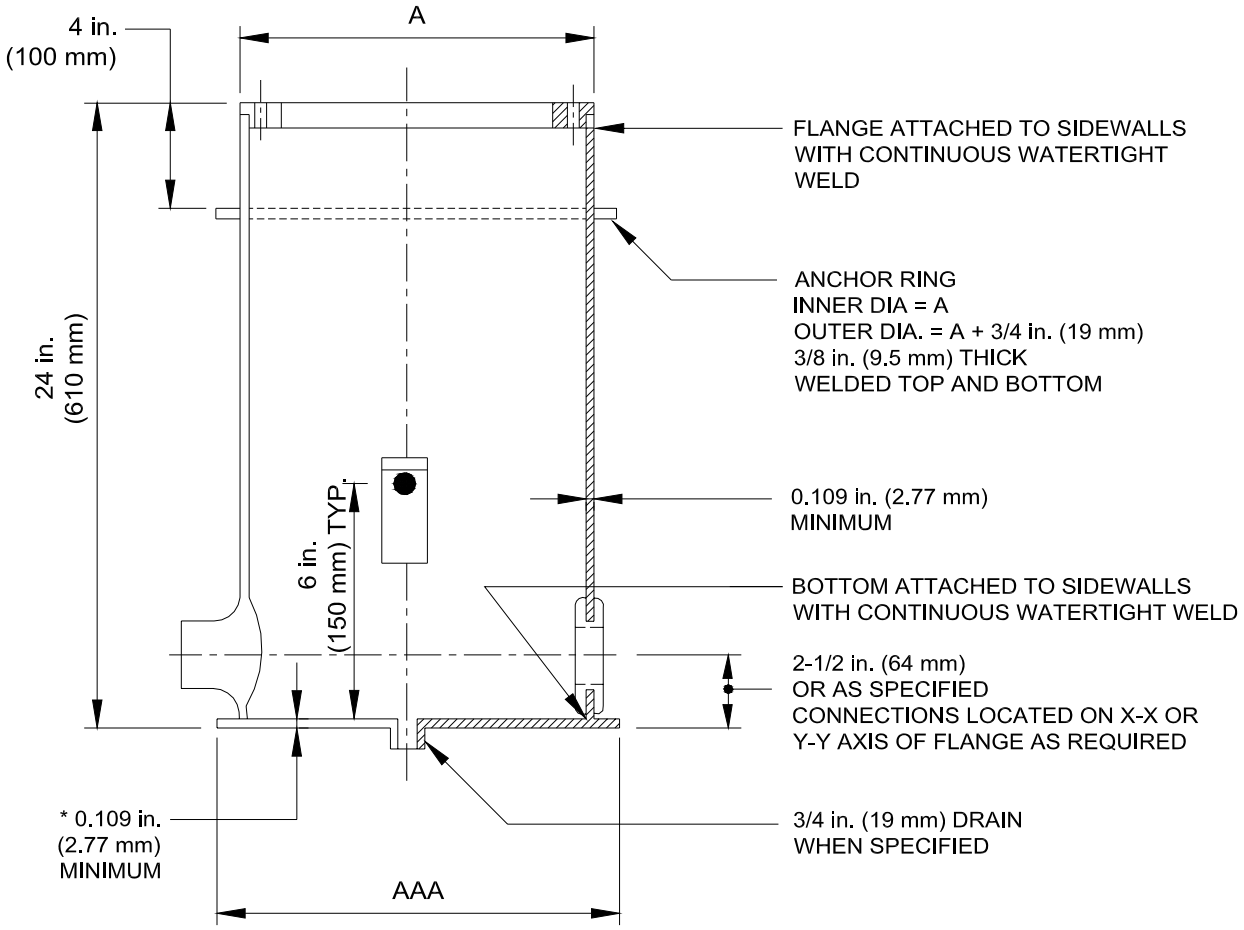


SIZES

| NOMINAL DIAMETER | 10 | 12 | 15 |
|---|---|---|---|
| A, OUTSIDE DIA. | 10.000 | 12.000 | 15.000 |
| TOLERANCES, A | +0.050<br>-0.000 | +0.050<br>-0.000 | +0.050<br>-0.000 |
| AAA BOTTOM DIA. | 10.375 | 12.375 | 15.375 |
| TOLERANCES, AAA | ±0.015 | ±0.015 | ±0.015 |

NOTE:

TABULATED DIMENSIONS ARE SHOWN IN INCHES, TO CONVERT FROM in. TO mm, MULTIPLY BY 25.4.
NMEQ MEANS NO METRIC EQUIVALENT.

**Figure 11. Body, Type L-868, Class I**

| NOMINAL DIAMETER | SIZES A | B | C |
|---|---|---|---|
| A, ACTUAL DIA. TOLERANCES, A | 10 10.000 ±0.050 | 12 12.000 ±0.050 | 15 15.000 ±0.050 |
| AAA TOLERANCES, AAA | 10.375 ±0.015 | 12.375 ±0.015 | 15.375 ±0.015 |
| BB, BOLT CIRCLE TOLERANCES, BB | 8.250 ±0.010 | 10.250 ±0.010 | 13.250 ±0.010 |
| * BBB, BOLT CIRCLE TOLERANCES, BBB | 9.250 ±0.010 | 11.250 ±0.010 | 14.250 * ±0.010 |
| CC TOLERANCES, CC | 6.000 ±0.015 | 9.250 ±0.015 | 12.375 ±0.015 |

NOTES:

1. TOPS AND BOTTOMS ATTACHED TO SIDEWALLS WITH CONTINUOUS WATERTIGHT WELDS.
2. HOLES IN TOPS AND BOTTOMS SHALL BE ALIGNED.
3. SUPPLY SIX 18-8 STAINLESS STEEL HEX HEAD 3/8 in. (9.53 mm) 16 UNC-2 (NMEQ) BOLTS, 7/8 IN. (22 mm) LONG WITH EACH MULTIPLE SECTION.
4. DIMENSIONS SHOWN ARE IN INCHES. TO CONVERT FROM in. TO mm, MULTIPLY BY 25.4. NMEQ MEANS NO METRIC EQUIVALENT.
5. CONDUIT CONNECTIONS ALIGNED WITH BOLT HOLE AXIS IN BOTTOM SECTION.

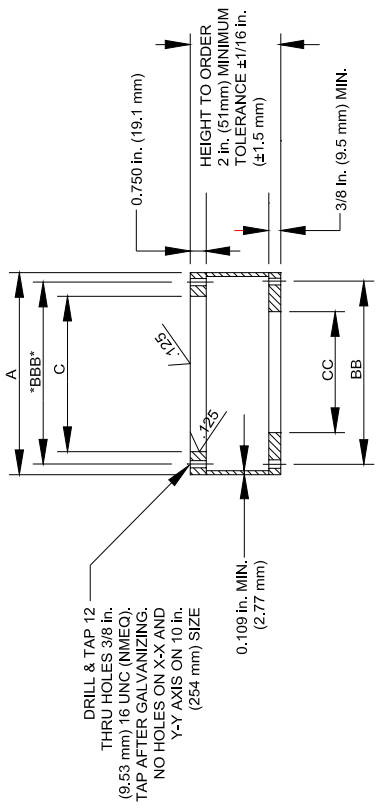


TOP SECTION

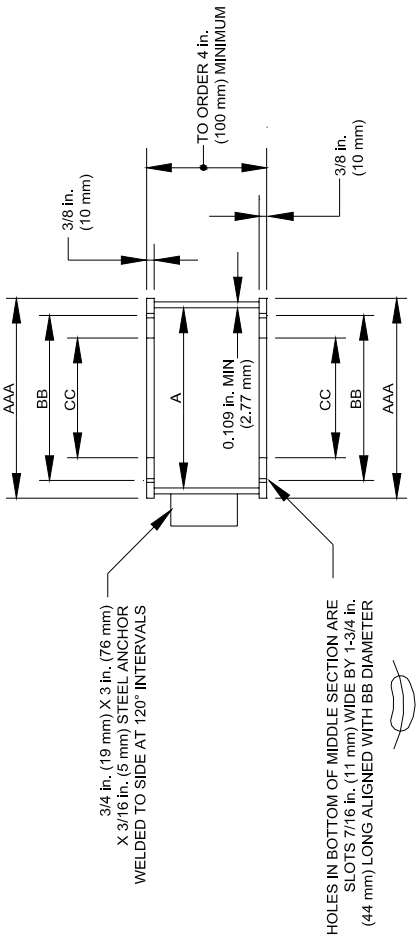


MIDDLE SECTION

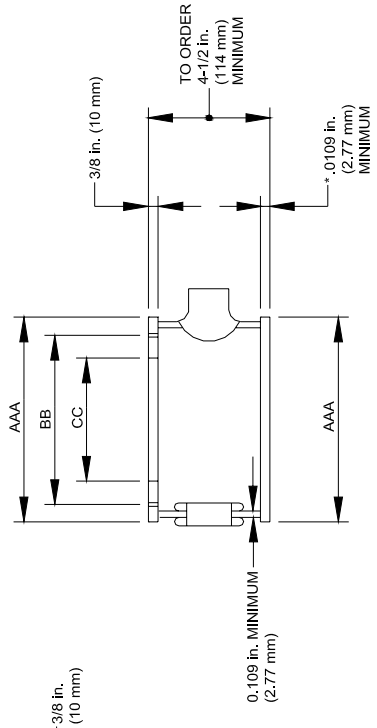


BOTTOM SECTION

**Figure 11 (Continued)**

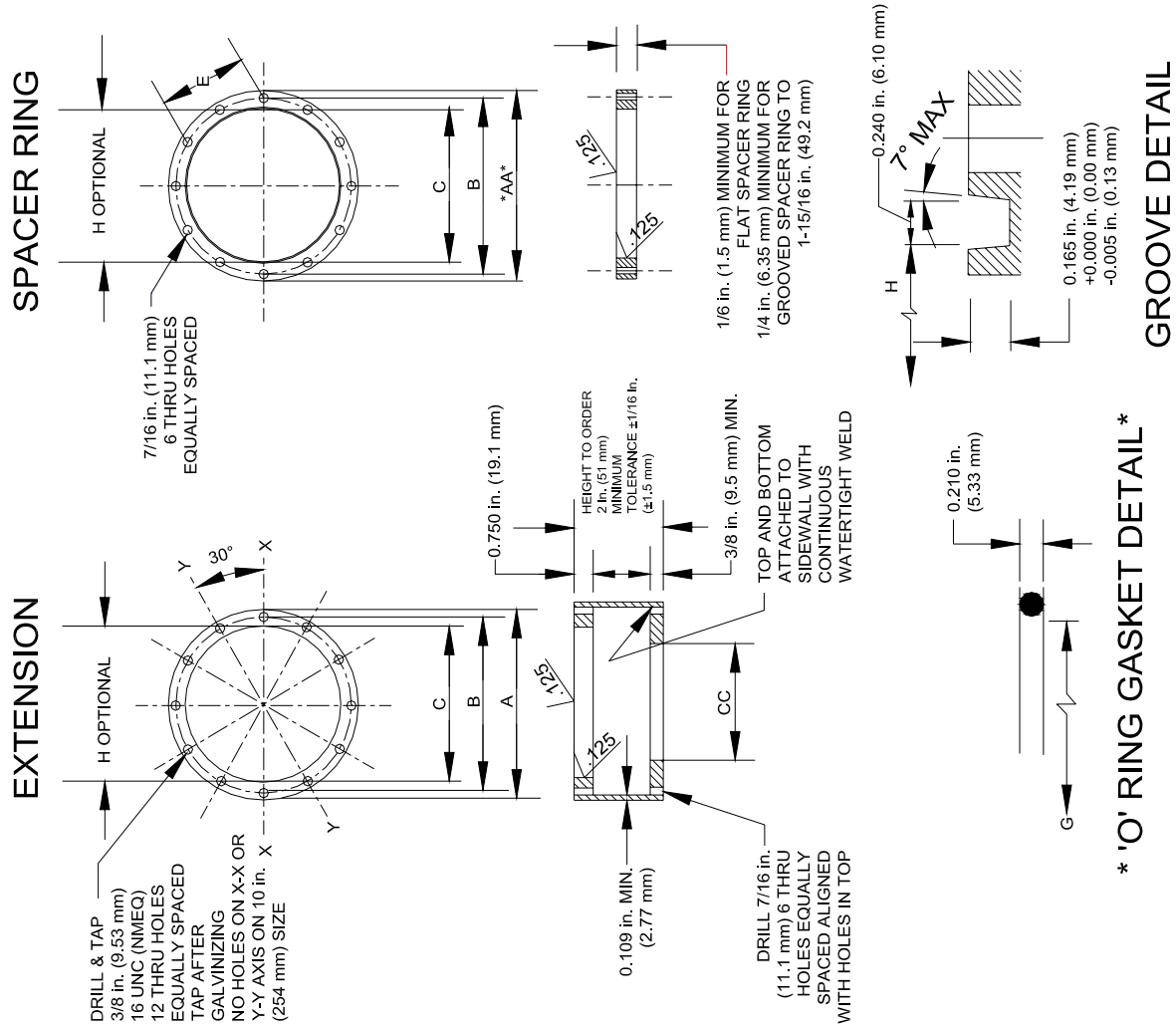


SIZES

| NOMINAL DIAMETER | A 10 | B 12 | C 15 |
|---|---|---|---|
| A, OUTSIDE DIA. TOLERANCES | 10.500 +0.050 -0.000 | 12.500 +0.050 -0.000 | 14.500 +0.050 -0.000 |
| * AA, SPACER RING O.D. * TOLERANCES, AA * | 10.000 +0.050 -0.000 | 12.000 +0.050 -0.000 | 15.000 * +0.050 * -0.000 * |
| B, BOLT CIRCLE TOLERANCES, B | 9.250 ±0.005 | 11.250 ±0.005 | 14.250 ±0.005 |
| H, GROOVE DIA. TOLERANCES, H | 8.145 ±0.008 | 10.145 ±0.008 | 13.145 ±0.008 |
| C, INSIDE DIA. TOLERANCES, C | 8.000 +0.015 -0.000 | 10.000 +0.015 -0.000 | 13.000 +0.015 -0.000 |
| CC, INSIDE DIA. TOLERANCES, CC | 8.000 ±0.015 | 9.250 ±0.015 | 12.375 ±0.015 |
| E, CHORD TOLERANCES, E | 4.625 ±0.005 | 5.625 ±0.005 | 7.125 ±0.005 |
| G, GASKET DIA. TOLERANCES, G | 8.160 ±0.008 | 10.160 ±0.008 | 13.160 ±0.008 |

NOTES:

1. SUPPLY SIX 18-8 STAINLESS STEEL HEX HEAD 3/8 in. (9.53 mm) 16 UNC (NMEQ) BOLTS OF A LENGTH REQUIRED FOR MINIMUM 1/2 in. (13 mm) THREAD ENGAGEMENT IN TOP FLANGE OF L-868 CONTAINER WITH EACH SPACER RING. FOR EXTENSIONS SUPPLY TWELVE BOLTS MEETING THE SAME REQUIREMENTS.
2. TABULATED DIMENSIONS SHOWN ABOVE ARE INCHES. TO CONVERT in. TO mm, MULTIPLY BY 25.4. NMEQ MEANS NO METRIC EQUIVALENT.

**Figure 12. Extensions, Type L-868, Class I**

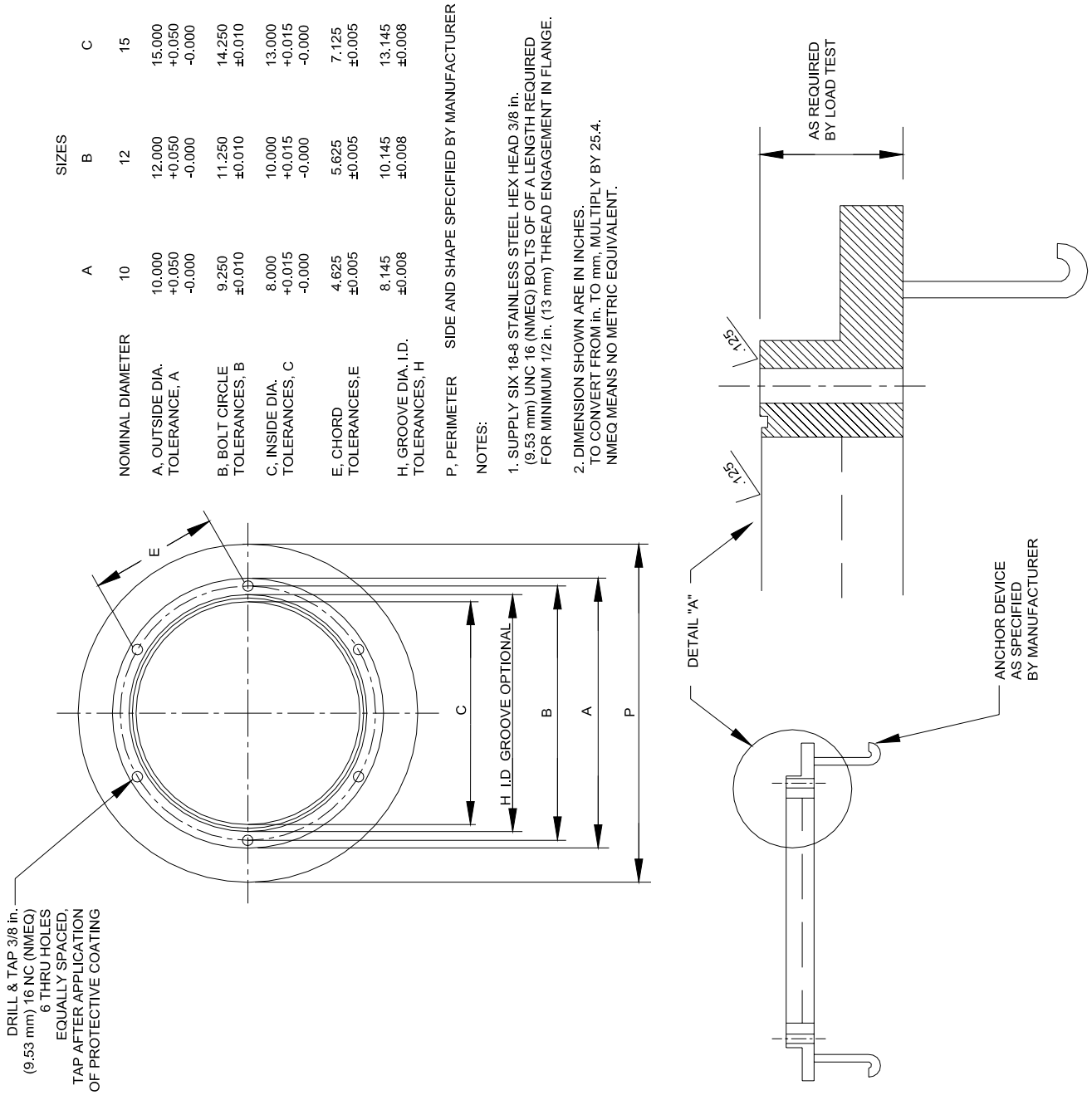


**Figure 13. Flange, Type L-868, Class I**

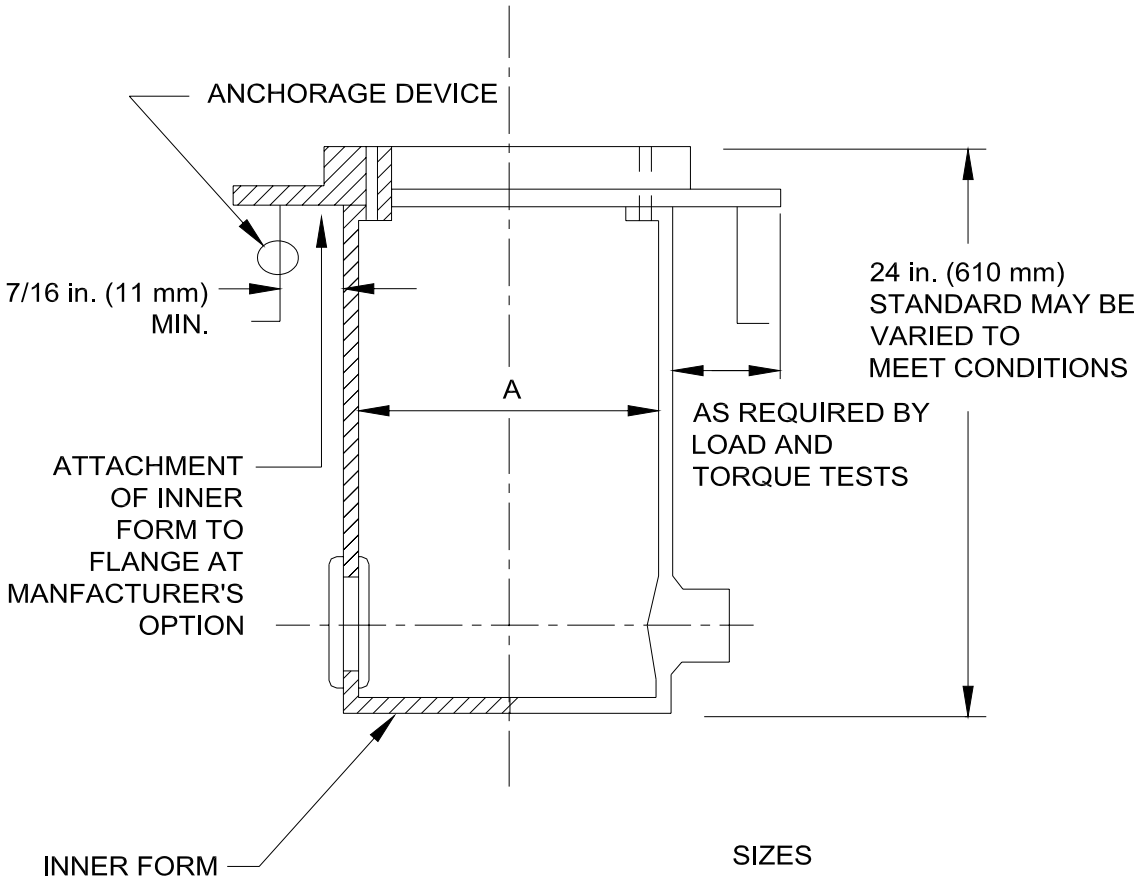


| | SIZES | | |
|---|---|---|---|
| | A | B | C |
| A, INSIDE DIA. MINIMUM | 9.782 | 11.782 | 14.782 |

NOTES:

1. CONDUIT CONNECTIONS ALIGNED WITH BOLT HOLE AXIS OF FLANGE.

2. DIMENSIONS SHOWN ARE IN INCHES. TO CONVERT FROM in. TO mm, MULTIPLY BY 25.4. NMEQ MEANS NO METRIC EQUIVALENT.

**Figure 14. Body, Type L-868, Class II**

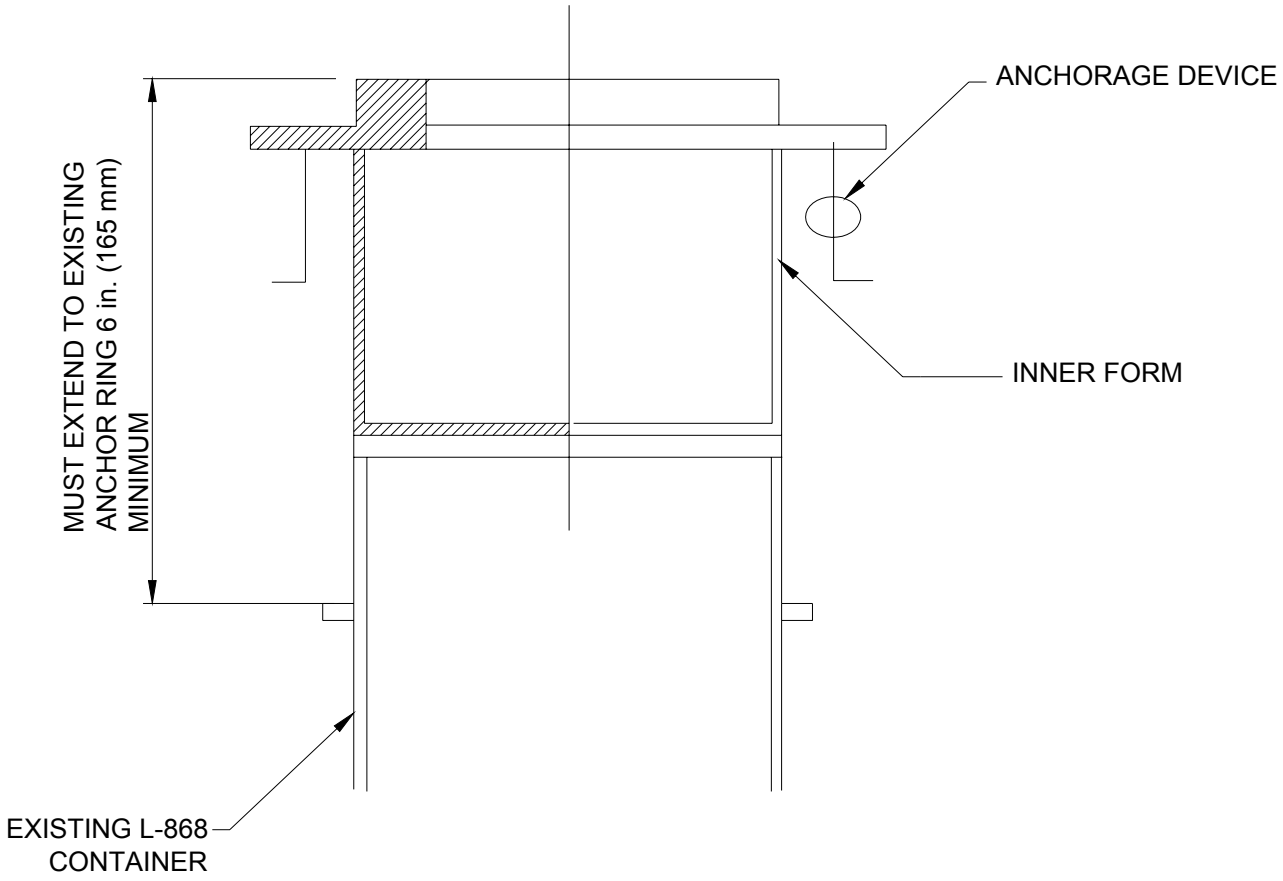


**Figure 15. Extensions, Type L-868, Class II**

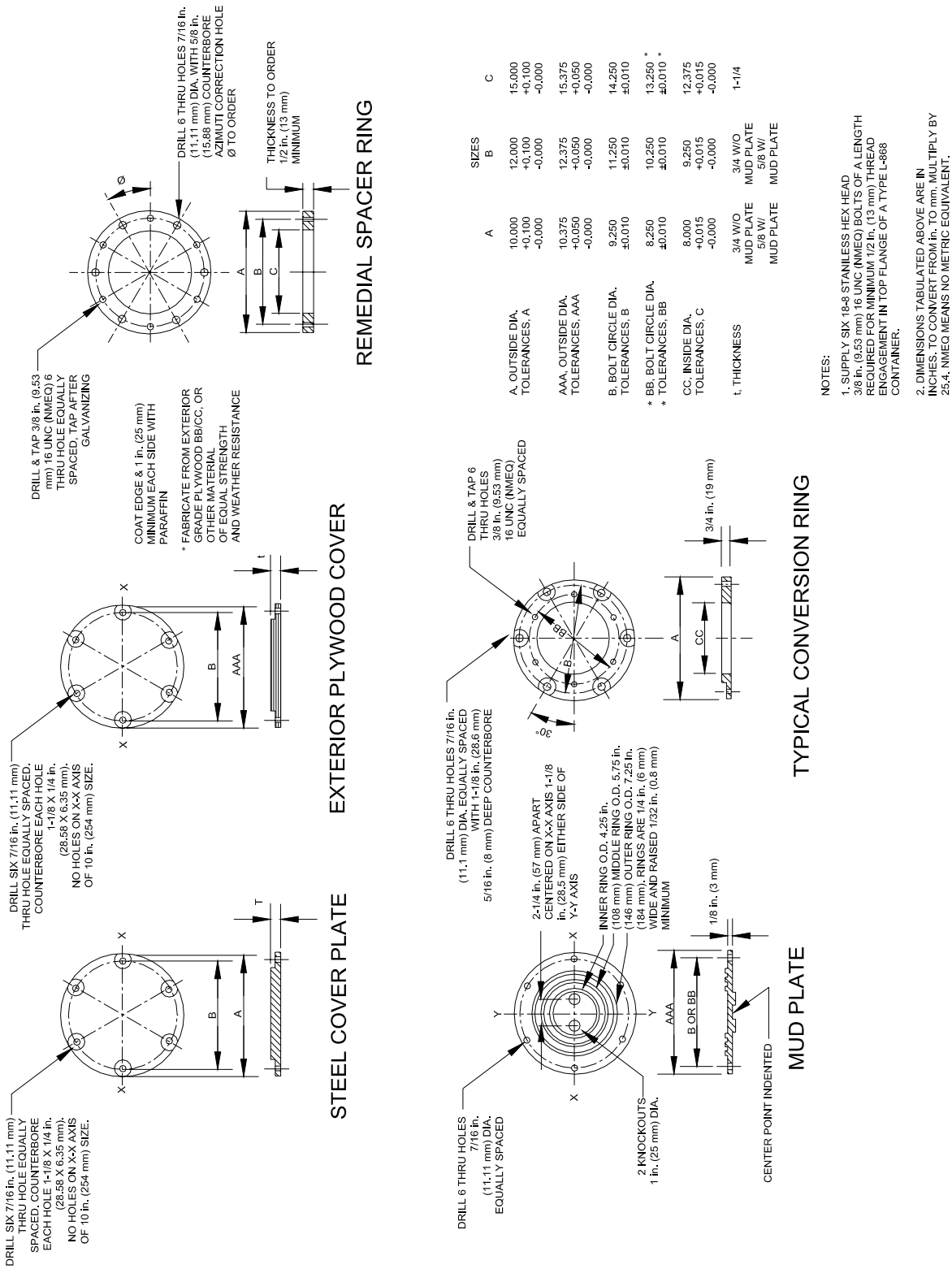


**Figure 16. Accessories, Type L-868**

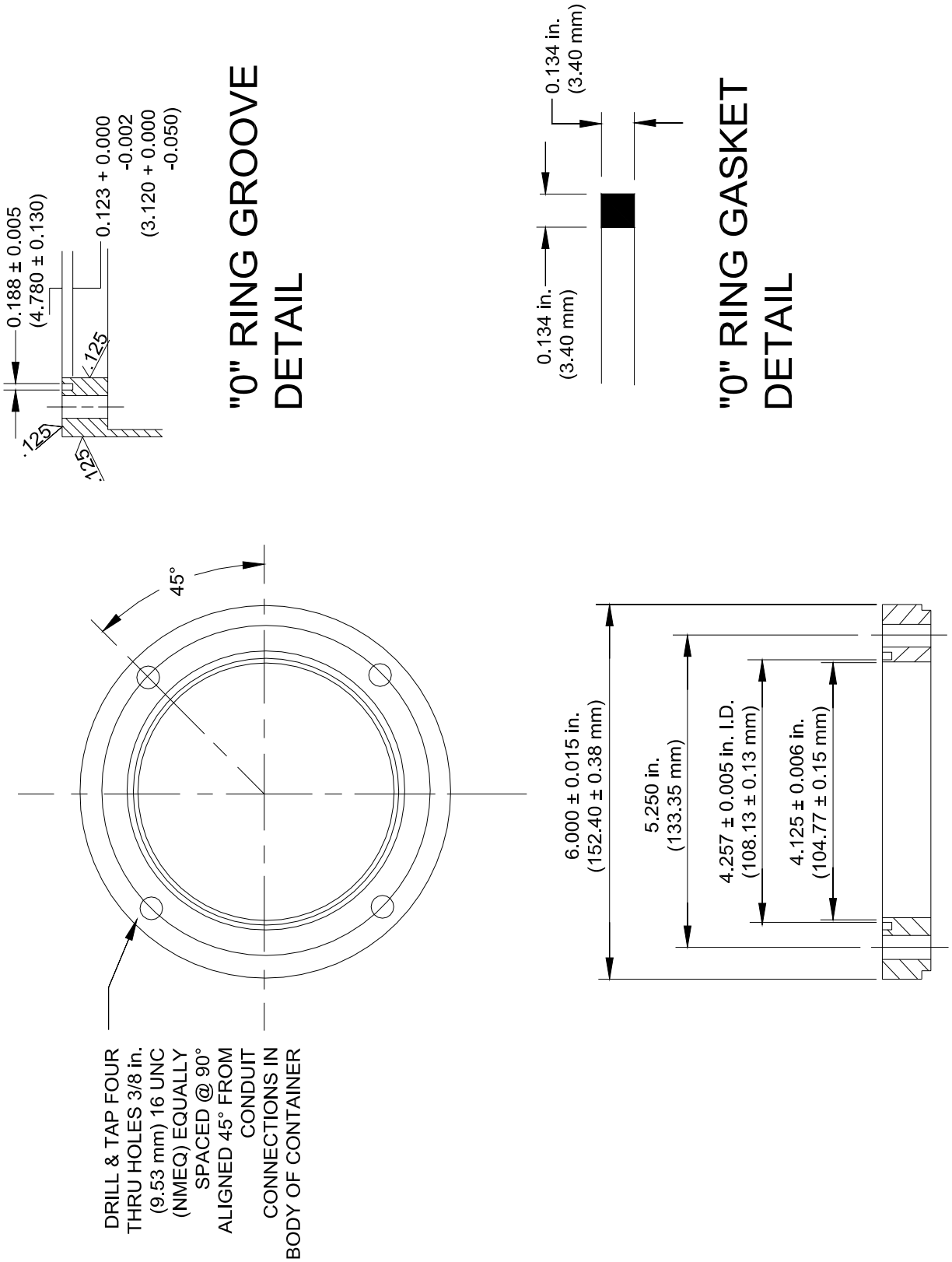


**Figure 17. Flange, Type L-869**

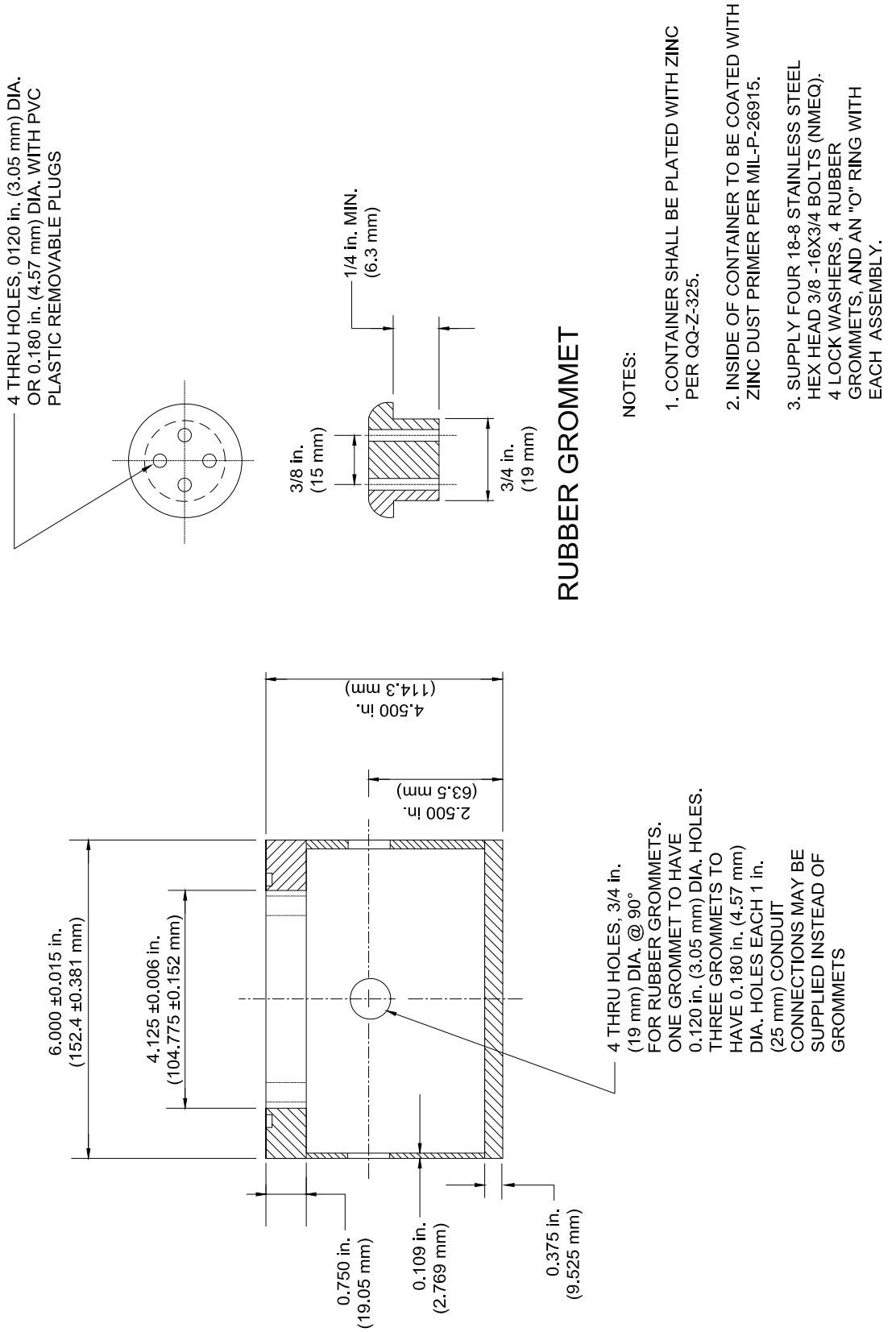


**Figure 18. Body, Type L-869**

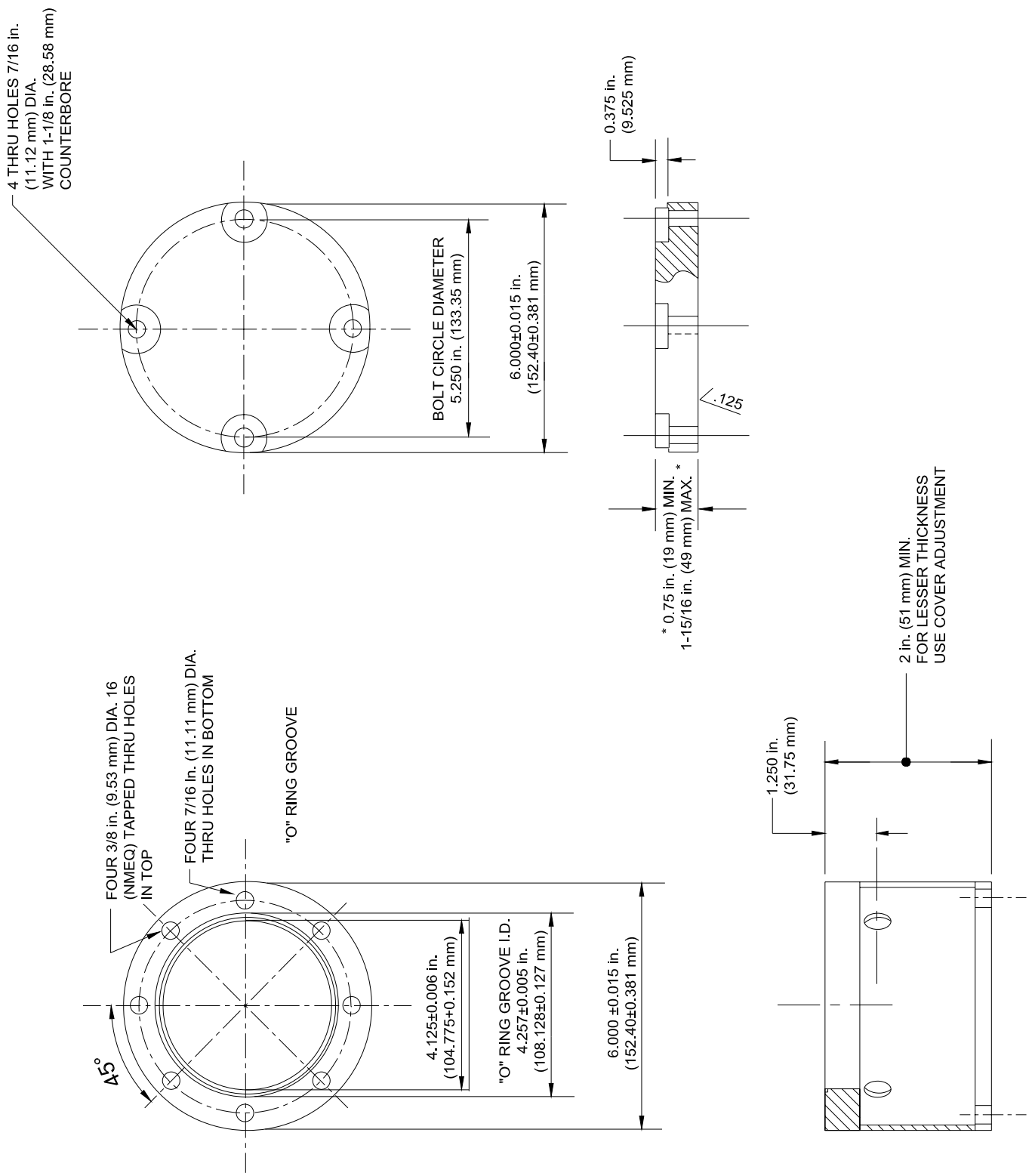


**Figure 19. Extensions, Type L-869**